BERKO®
A Marley Engineered Products Brand
470 Beauty Spot Rd. E
Bennettsville, SC 29512

SUBMITTAL SHEET
HUHAA SERIES
HORIZONTAL/VERTICAL UNIT HEATERS

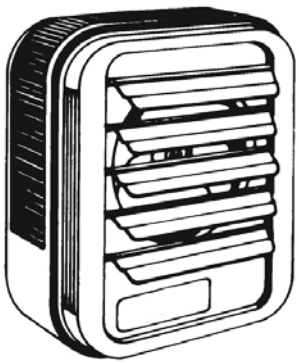

c UL US
File # E21609

CAPACITIES
3KW to 10kW 208, 240, and 480V 1 Phase or 3 Phase (Voltage and Phase varies with model)

See Selection Chart for all Options

JOB NAME: _____

LOCATION: _____

ARCHITECT: _____

ENGINEER: _____

CONTRACTOR: _____

SUBMITTED BY: _____ DATE: _____

TAG/ITEM	QTY.	CATALOG NUMBER	HEATER			AMPS	GRILLE FINISH	CEILING MOUNT
			KW	VOLTS	Ø			

ACCESSORIES AND CONTROLS	TAG/ITEM	QTY.	CATALOG NUMBER	DESCRIPTION

SUBMITTED BY:	DATE

APPROVED BY:	DATE

HUHAA SERIES

ARCHITECT'S AND ENGINEER'S SPECIFICATIONS*

- Unit mounts either horizontally or vertically. Totally versatile. For factories, warehouses, garages, stores, shipping rooms, power stations. Can be used for primary, supplementary, spot, or dual-system eating.
- Each PRO model comes with a built in single stage thermostat, disconnect switch, and 24VAC transformer.
- Each PRO-SSP model comes with a remote mount SmartSeries Plus control, disconnect switch, and 24VAC transformer.
- Forced air unit heater with 4 power ratings; from 3KW to 10 KW heating output; 208, 240, 277 and 480V.
- 24 compatible models (no need to try to assemble a heating system from 70 or 80 models!)
- Heavy gauge die-formed steel housing. Two-toned, smartly styled with stainless steel louvers.
- Advanced pull-through air flow design draws air across heating element for more even air distribution and cooler element operation.
- Specially designed venturi outlet to meet that added throw as required in vertical position.
- Branch circuit fusing (when required).
- Completely enclosed fan motor.
- 1- or 3-phase wiring on 5 through 10 KW 208/240V units (field interchangeable).
- Aluminum-finned, copper clad steel sheath heating element has longer useful life, because of cooler sheath temperature and faster heat dissipation .
- 24V control transformer standard on all models, providing a safer and more accurate means of temperature control.
- Automatic reset linear thermal cut-out, capillary type, provides protection over entire length of element areas (Manual reset protection available on made-to-order basis).
- Fan delay feature eliminates cold drafts. Element heats up before fan cuts in, then fan continues to distribute heat after element shuts off.
- Ruggedly built, yet lighter weight for easier installation. No piping flutes, valves, or traps.
- Individually adjustable discharge louvers to control air flow.
- Choice of optional diffusers for variety of air patterns, maximizing heat concentration and coverage in the vertical position.
- Meets all UL, NEC, and OSHA requirements.

**Berko reserves the right to change specifications without prior notice.*

Dimensions and Clearances:

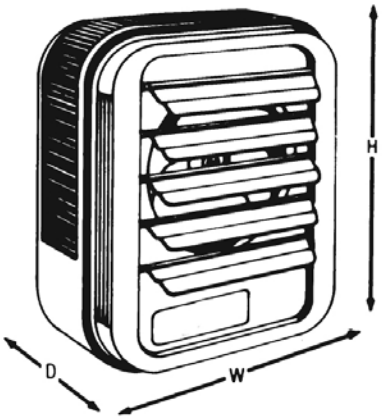

CATALOG NO.	HEIGHT	WIDTH	DEPTH
HUHAA03 & 05	16″	14″	7 ½″
HUHAA07 & 10	21 ¾″	19″	7 ½″
HUHAA15 & 20	21 ¾″	19″	12 ¾″
HUHAA25 & 30	30″	26 ⅝″	11 ¾″
HUHAA40 & 50	30″	26 ⅝″	17 ⅛″

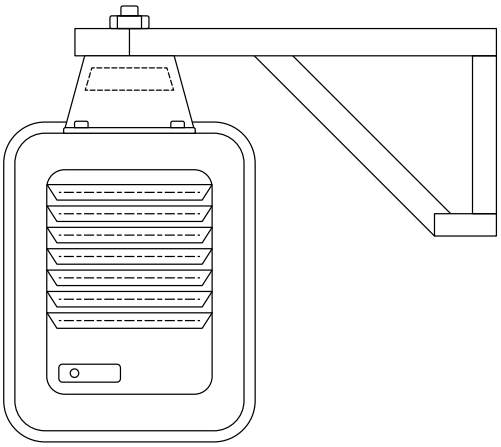

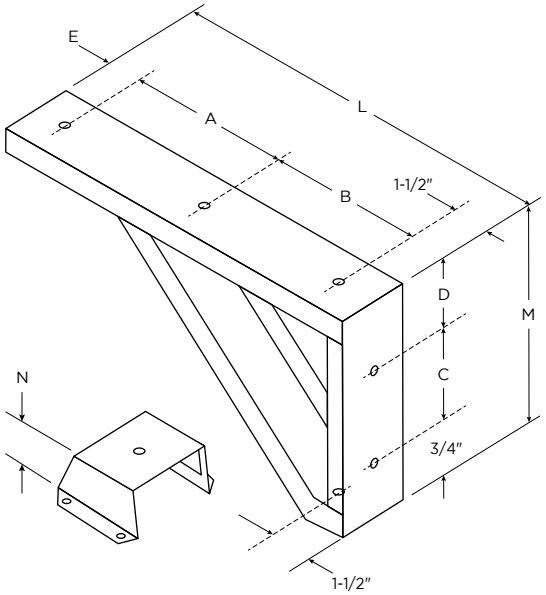

	3–20 kW	25–50 kW
A	7 ¼″	9 7⁄16″
B	9 ½″	14 ⅜″
C	7 ¼″	12 ⅛″
D	11 5⁄16″	2 1⁄16″
E	2 ¼″	3″
L	20 ½″	28 15⁄16″
M	9 15⁄16″	14 15⁄16″
N	3 ¼″	4 ½″

Approvals: _____ _____ _____

Models & Specifications:

ITEM INFORMATION		ELECTRICAL DATA					AIR DELIVERY DATA FAN MOTOR DATA	
CATALOG NO.	UPC	VOLTS	PHASE	KW	AMPS	CONTROL VOLT	CFM	SHIP WT.*
HUHAA320	685360036885	208	1	3	14.5	208	350	27 lbs
HUHAA520	685360036977	208	1–3	5	24	208	350	27 lbs
HUHAA720	685360037011	208	1–3	7.5	36	24	650	38 lbs
HUHAA1020	685360036731	208	1–3	10	48	24	650	38 lbs
HUHAA1520	685360036779	208	1–3	15	72	24	910	53 lbs
HUHAA324	685360036892	208/240	1–3	2.2/3.0	11.0/12.5	208/240	350	27 lbs
HUHAA524	685360036984	208/240	1–3	3.7/5.0	18.0/21.0	208/240	350	27 lbs
HUHAA724	685360037028	208/240	1–3	5.6/7.5	27.0/31.3	24	650	38 lbs
HUHAA1024	685360036748	208/240	1–3	7.5/10.0	36.0/42.0	24	650	38 lbs
HUHAA1524	685360036786	208/240	3	11.2/15.0	31.3/36.1	24	910	53 lbs
HUHAA327	685360036908	277	1	3	11	277	350	27 lbs
HUHAA527	685360036991	277	1	5	18	277	350	27 lbs
HUHAA727	685360037035	277	1	7.5	27	24	650	38 lbs
HUHAA348	685360036915	480	3	3	3.6	24	350	27 lbs
HUHAA548	685360037004	480	3	5	6	24	350	27 lbs
HUHAA748	685360037042	480	3	7.5	9	24	650	38 lbs
HUHAA1048	685360036762	480	3	10	12	24	650	38 lbs
HUHAA1548	685360036793	480	3	15	18	24	910	53 lbs
HUHAA2020	685360036809	208	3	20	56	24	1320	60 lbs
HUHAA2024	685360036816	208/240	3	15.0/20.0	41.2/48.0	24	1320	60 lbs
HUHAA2048	685360036823	480	3	20	24	24	1320	60 lbs
HUHAA2548	685360036847	480	3	25	30	24	2100	93 lbs
HUHAA3048	685360036878	480	3	30	36	24	2100	93 lbs
HUHAA4048	685360036939	480	3	40	48	24	3000	114 lbs
HUHAA5048	685360036960	480	3	50	60.2	24	3000	114 lbs
HUHAA3020	685360036854	208	3	30	84	24	2100	93 lbs
HUHAA2524	685360036830	208/240	3	18.7/25.0	52.0/60.0	24	2100	93 lbs
HUHAA3024	685360036861	208/240	3	22.5/30.0	63.0/72.3	24	2100	93 lbs
HUHAA4024	685360036922	208/240	3	30.0/40.0	83.4/96.4	24	3000	114 lbs
HUHAA5024	685360036953	208/240	3	37.5/50.0	104.2/120.4	24	3000	114 lbs
HUHAA1027	685360036755	277	1	10	36	24	650	38 lbs
HUHAA1027	685360036755	277	1	10	36	24	650	38 lbs

"1-3" phase denotes field convertible to 3-Phase

NOTE: All standard units are supplied with a low voltage control transformer and contactor (24V) except HUHAA03 and HUHAA05, 208V, 240V and 277V models. Low voltage control on these units is available on Made to Order (Contact your local Marley Sales Representative for typically associated lead times). If using low-voltage control, a 24v transformer is required. All units are also available on special order for 120V control; internal with transformer or external without transformer. On dual-voltage units CFM, FPM, & RPM ratings are listed at higher voltage operation. On dual-phase units maximum amp draw is listed for respective voltage. Must use two-stage Thermostat on 3Ø operation.

Approvals: _____ _____ _____

Optional Mounting Brackets:

	CATALOG NO.	UPC	COMPATIBILITY	SHIP WT.*
Standard	B10	685360152295	HUHAA03–10	8 lbs
	MCB105PK	685360173627	(Master Pack, Five B10 Brackets)	
	B20	685360152301	HUHAA15 & 20	10 lbs
	B30	685360152318	HUHAA25 & 30	13 lbs
	B50	685360152325	HUHAA40 & 50	15 lbs
Ceiling	CMB10	685360152363	3–10 KW units	3 lbs
	CMB20	685360152370	15–20 KW units	4 lbs
	CMB30	685360152387	25–30 KW units	5 lbs
	CMB50	685360152394	40–50 KW units	6 lbs
Vertical Ceiling	VDMB5	685360152455	3–5 KW units	5 lbs
	VDMB20	685360152462	7.5–20 KW units	7 lbs
	VDMB50	685360152479	25–50 KW units	9 lbs
Remote Thermostats	MUHBKT-TST-SM	685360175089	MUH 3–20kw	2 lbs
	MUHBKT-TST-L	685360175096	MUH 25-50kw	2 lbs

MOUNTING LIMITATIONS: Unit heaters should not be used in potentially explosive atmospheres. The finish is not intended for direct salt spray exposure in marine applications or the highly corrosive atmospheres of swimming pools, chemical storage bins, etc. Do not install unit heaters above recommended maximum mounting height. Obstructions must not block unit heater air inlet or discharge. Heaters must be mounted at least 7 ft. above the floor to prevent accidental contact with the heating element or fan blade which could cause injury.

Optional Dust Shields:

CATALOG NO.	UPC	COMPATIBILITY	SHIP WT.*
JRDS8	685360150697	3–5 KW units	5 lbs
JRDS14	685360150673	15–20 KW units	6 lbs
JRDS19	685360150680	25–50 KW units	10 lbs

Diffuser Selector Table:

CATALOG NO.	UPC	COMPATIBILITY	SHIP WT.*
HUHAALDL	685360036632	Louvered Diffuser F	10 lbs
HUHAALDM	685360036649	Louvered Diffuser for 7.5–20KW Units	8 lbs
HUHAALDS	685360036656	Louvered Diffuser for 3 & 5KW Units	5 lbs

Optional Field-Installed Electrical Controls:

CATALOG NO.	UPC	DESCRIPTION	ELECTRICAL RATING
UHMT1*	685360152417	Single Pole Internal Thermostat-Temp Range: 40°– 85°F	25A @ 120, 240VAC Res. 22A @ 277VAC Res.
UHMT2	685360152424	Two Stage Internal Thermostat-Temp. Range: 40°–85°F	25A @ 120, 240VAC Res. 22A @ 277VAC Res. 125VA
HUHAAFS	685360046372	Internal Summer Fan Switch 250, 480, 600V.A.C. 1,2 OR 3 PH	Pilot Duty 6A, 600VAC Res. 2 HP
HUHAARFS1	685360047089	Remote Summer Fan Switch (Line Voltage)	2 HP, 250-480VAC
HUHAARFS2	685360047096	Remote Summer Fan Switch with Relay (24V Coil-Single Pole Normally Open)	6 AFL, 35 ALR, 250VAC, 60Hz. 3 AFL, 18 ALR, 480VAC, 60Hz
HUHAAHRT	685360046945	Heat Recovery Thermostat with Relay (24V Coil-Single Pole Normally Open) Hi — 120°F, Low — 60°F	6 AFL, 35 ALR, 250VAC, 60Hz 3 AFL, 18 ALR, 480VAC, 60Hz
HUHAADS25	685360047034	Power Disconnect Switch (3-Pole)	30A @ 600VAC, Res.
HUHAADS60	685360047041	Power Disconnect Switch (3-Pole)	80A @ 600VAC, Res.

*"-S" version available as a suitable alternative

NOTE: Any field installed options assembled in the factory require added surcharge. See price book for charges. MPDS60 disconnect switch is not suitable for field installation on 7.5kw and 10kw unit heaters. Visit website or contact your local representative for compatibility details.

Diffusers for Vertical Mounting:

No Diffuser:
No diffuser needed where a straight downflow air pattern is required. For maximum air throw, remove louvers. Any of three diffusers can be added to basic heater.

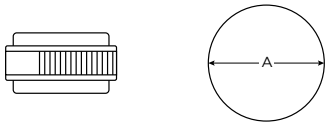

Louver Diffuser:
Permits directional (straight line) air flow as in air curtain application over doorways. Rectangular coverage, Louvers can be turned in either direction.

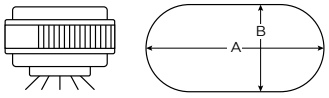

NOTE: Visit website or contact your local representative for additional details

No matter the industry or application, Marley Engineered Products has a robust portfolio of innovative, reliable, high-performance comfort heating and ventilation solutions for all your heating needs.

For more information or assistance on your next project, contact Technical Services at 800-642-4328

Scan the QR code to access additional specs and features

Approvals: _____ _____ _____