Electrical Accessories

For MUH, HUHAA, Dayton 3UF77 - 3UF98 and 2YU58-2YU81, 3END3 and 3END4 Series Unit Heaters

INSTALLATION OF INTERNAL THERMOSTAT MT1, MT2, 2E569, 3UG72 2YU33 and 2YU95

1. Remove 5/16" (7.9mm) knockout from back of heater and route capillary tube through hole (Figure 1).
2. Install thermostat bulb clip in slot provided in the back panel of the heater. Secure capillary bulb in clip.
3. Press on left side of logo label on front of heater to locate shaft and screw holes. Punch holes through label.
4. Install thermostat as shown in Figure 2, coiling any excess capillary tubing inside the heater.

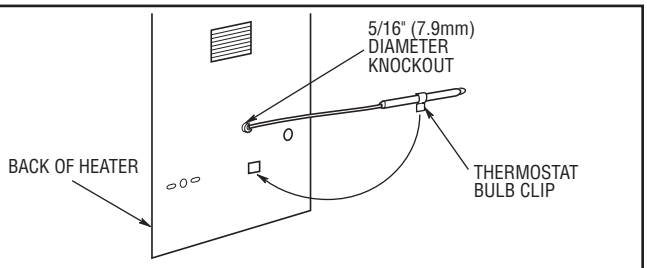

Figure 1. Installation of Internal Thermostat Capillary

WARNING

TO PREVENT POSSIBLE ELECTRICAL SHORT CIRCUIT OR FIRE, KEEP CAPILLARY TUBING AWAY FROM INTERNAL ELECTRICAL COMPONENTS.

5. Refer to wiring diagram, Figure 6, for wiring procedure on 3KW and 5KW (208V, 240V and 277V only). Refer to wiring diagram, Figure 7, for wiring procedure on all other heaters.
6. Remove backing from label (supplied) and install over thermostat shaft. Install knob by pushing onto the thermostat shaft.

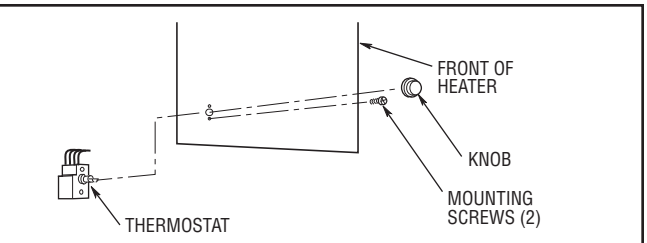

Figure 2. Installation of Internal Thermostat

INSTALLATION OF FAN SWITCH FS, 3UG03 and 2YU82

1. Remove 1/2" (12.7mm) knockout (located between ON and AUTO) from back of heater (Figure 3).
2. Install manual fan switch as shown in Figure 3. (Note orientation of slot in switch nozzle. Locate slot in the switch nozzle towards the "AUTO" position.) Be sure to use lockwasher to prevent rotation of switch.

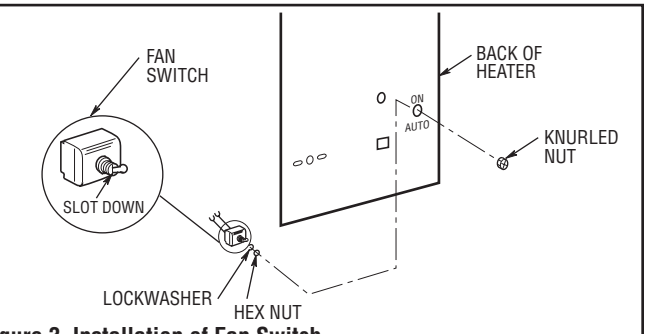

Figure 3. Installation of Fan Switch

3. Install leads to terminal block. Refer to wiring diagram, Figure 6, for wiring procedure on 3KW and 5KW units (208V, 240V, and 277V only). Refer to wiring diagram, Figure 7, for wiring procedure on all other heaters.

INSTALLATION OF REMOTE FAN SWITCH RFS1

The Remote Fan Switch is mounted external and remote from the unit heater. The voltage of the remote fan switch circuit is the same as the supply voltage to the heater.

1. Use 14 gauge copper, NEC Class 1, 600V rated insulated wire. Wiring must meet all local and NEC requirements.
2. Install the remote fan switch in a standard wall box in any convenient location that is protected from traffic or other accidental damage.
3. Connect the 14 gauge copper field wire to the switch lead wires with suitable connectors.
4. A 1/2-inch (12.7mm) knockout is provided in the back of the heater adjacent to the control terminal board. Use a crimp-on terminal suitable for No. 8 screw on the control terminal board. Connect one field wire terminated lead to terminal F1 and the other terminated lead to terminal F2. Refer to Figure 6 for connecting to heaters without built-in contactors. Refer to Figure 7 for connecting to heaters equipped with built-in contactors.

INSTALLATION OF REMOTE PILOT DUTY FAN SWITCH RFS2 (Including Wall Switch and Relay)

The Remote Fan Switch is mounted external and remote from the unit heater.

1. Use 18 gauge (min.), NEC Class 1, 600V wiring that meets all local and NEC requirements.
2. Install the remote fan switch in a standard wall box in any convenient location that is protected from traffic or other accidental damage.
3. Connect the field wire to the switch lead wires with suitable connectors.
4. A 1/2-inch (12.7mm) knockout is provided in the back of the heater adjacent to the control terminal board. Use a crimp-on terminal suitable for No. 8 screw on the control terminal board. Connect one field wire terminated lead to terminal "R" and the other terminated field wire lead to terminal "G". Refer to Figure 7.
5. Install relay as indicated below.

INSTALLATION OF FAN RELAY (For RFS2)

1. Mount relay in control compartment with two No. 8 mounting screws as shown in Figure 4.
2. Connect the lead wires from the relay to the control terminal board as shown in Figure 7. Each lead wire is marked for proper terminal location; connect the lead wires as indicated.

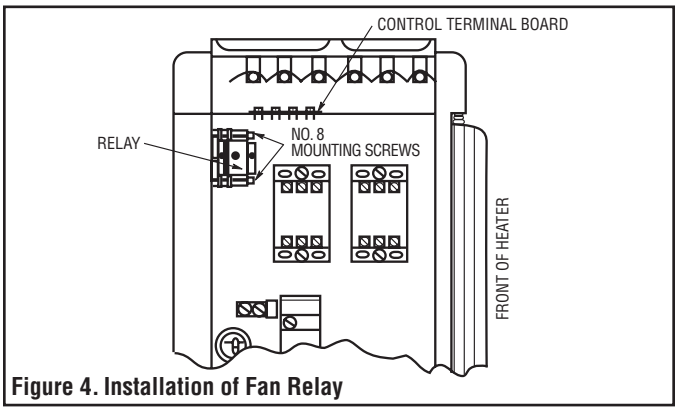

Figure 4. Installation of Fan Relay

INSTALLATION OF HEAT RECOVERY THERMOSTAT HRTA, 3UG63 and 2YU90

NOTE: This accessory cannot be installed on heaters equipped with built-in single-pole or two-stage thermostats.

(For heaters with 24 Volt Control Circuit refer to Fig. 7 and proceed to step 1. For heaters with Line Voltage Control refer to Fig. 6 and proceed to step 3.)

1. Mount relay in baffle compartment with two No. 8 mounting screws as shown in Figure 4.

2. Connect the lead wires from the relay to the control terminal board as shown in Figure 7. Each lead wire is marked for proper terminal location; connect lead wires as indicated.

3. Remove 5/16" (7.9mm) knockout from back of heater and route capillary tube through hole (See Figure 1).

4. Install thermostat bulb clip in slot provided in the back panel of the heater. Secure capillary bulb in clip.

5. Press on left side of logo label on the front of heater to locate shaft and screw holes. Punch holes through label.

6. Install heat recovery thermostat as shown in Figure 2, coiling any excess capillary tubing inside the heater.

7. Use the wire tie to hold the thermostat leads to other wiring at approximately the midpoint of the leads between control terminal board and thermostat.

WARNING

TO PREVENT A POSSIBLE ELECTRICAL SHORT CIRCUIT OR FIRE, KEEP CAPILLARY TUBING AWAY FROM INTERNAL ELECTRICAL COMPONENTS.

8. Refer to wiring diagram, Figure 6 or Figure 7 for wiring procedure.

9. Install knob by pushing onto the thermostat shaft.

10. Set thermostat for desired turn-on temperature. Full counter-clockwise rotation of the knob is approximately 70°F (21° C). Full clockwise rotation of the knob is approximately 120°F (49° C).

INSTALLATION OF 25 AMP AND 60 AMP POWER DISCONNECT SWITCH DS25, DS60, 3UG68, 3UG69, 2YU93 and 2YU94

1. Use copper conductor supply wire only when using these switches.

2. Remove the 5/8" (16mm) knockout and the two knockout slots from back of heater, below OFF-ON markings.

3. Install power disconnect switch with two mounting screws as shown in Figure 5.

4. Install the knob with the pointer position at the "OFF" position marking when the switch is rotated to the full counterclockwise position.

5. Before connecting the wires of the switch, check the pointer index. Check to be sure the pointer end of the knob points to "OFF" when the switch is rotated full counterclockwise. It may be necessary to rotate the switch 180° to index the pointer knob.

6. Refer to wiring diagram, Figure 8, for wiring procedure.

(NOTE: For single-phase, remove and discard leads "L2" and "S2").

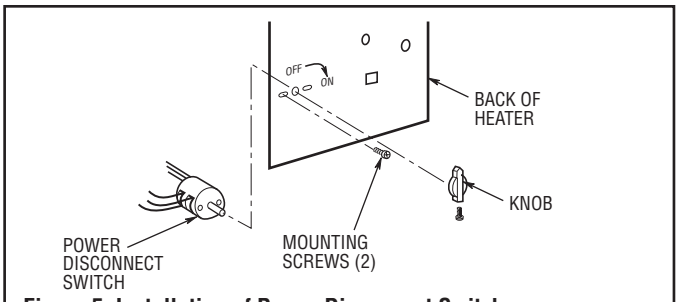

Figure 5. Installation of Power Disconnect Switch

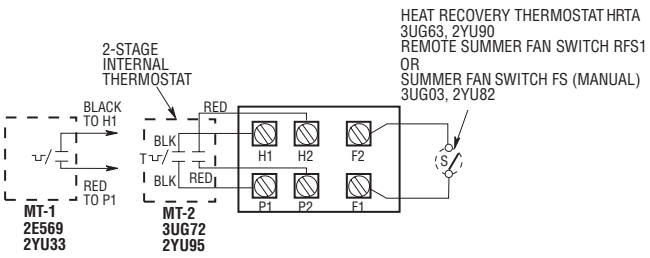

NOTES:
1. THIS STYLE CONTROL TERMINAL BOARD USED WITH MODELS 3KW AND 5KW UNITS (208V, 240V AND 277V ONLY).
2. WHEN UNIT IS WIRED FOR SINGLE PHASE, JUMPER H1 TO H2. IF SINGLE POLE THERMOSTAT IS USED WITH SINGLE PHASE UNIT, CONNECT THERMOSTAT LEADS TO P1 AND H1.
3. EXTERNAL LINE VOLTAGE THERMOSTAT SHOULD BE TREATED AS SINGLE STAGE ONLY.

Figure 6. Control Terminal Board (for Heaters without Contactors)

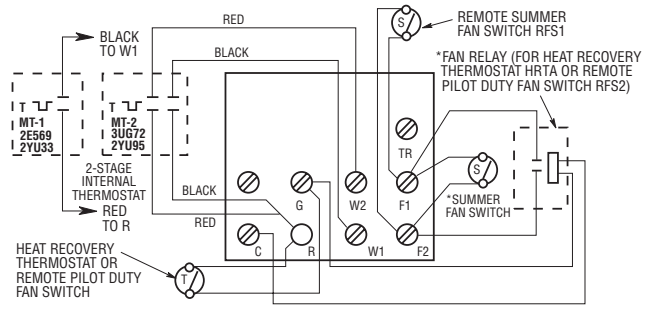

NOTES:
1. THIS STYLE CONTROL TERMINAL BOARD USED WITH ALL MODELS EXCEPT 3KW AND 5KW UNITS (208V, 240V AND 277V ONLY).
2. REMOVE JUMPER W1 TO W2 WHEN 2-STAGE THERMOSTAT IS USED.
3. *ONLY ONE OF THESE ACCESSORIES MAY BE INSTALLED IN A SINGLE HEATER.
4. EXTERNAL LINE VOLTAGE THERMOSTATS SHOULD BE TREATED AS SINGLE STAGE ONLY.

Figure 7. Control Terminal Board for RFS1 and RFS2 (for Heaters with Contactors)

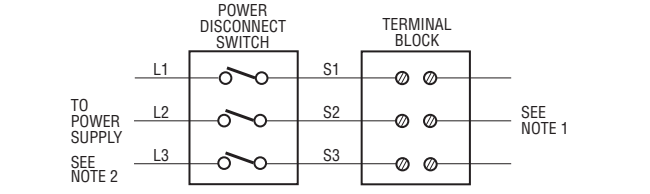

NOTES:
1. THIS ILLUSTRATION SHOWS WIRING HOOK UP FOR THREE PHASE SERVICE. REMOVE LEAD WIRES MARKED L2 AND S2 WHEN USING ONE PHASE POWER SERVICE.
2. USE COPPER SUPPLY WIRE ONLY WITH THIS SWITCH.

Figure 8. Power Disconnect Switch Wiring Diagram for DS25, DS60, 3UG68, 3UG69 2YU93 and 2YU94

470 Beauty Spot Rd. East
Bennettsville, SC 29512 USA