BERKO®
A Marley Engineered Products Brand
470 Beauty Spot Rd. E
Bennettsville, SC 29512

SUBMITTAL SHEET
HUHAA-PRO SERIES
HORIZONTAL/VERTICAL UNIT HEATERS

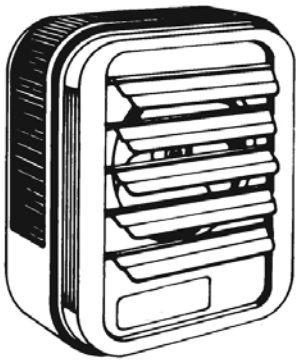

c UL us
File # E21609

CAPACITIES
3KW to 10kW 208, 240, and 480V 1Ø or 3Ø (Voltage and Phase varies with model)

See Selection Chart for all Options

HUHAA-PRO SERIES – **HORIZONTAL/VERTICAL UNIT HEATERS**

JOB NAME: _____

LOCATION: _____

ARCHITECT: _____

ENGINEER: _____

CONTRACTOR: _____

SUBMITTED BY: _____ DATE: _____

TAG/ITEM	QTY.	CATALOG NUMBER	HEATER			AMPS	CONTROL CKT. VOLTS	MOTOR VOLTS	AIR FLOW	
			KW	VOLTS	Ø				CFM	F* RISE

ACCESSORIES AND CONTROLS	TAG/ITEM	QTY.	CATALOG NUMBER	DESCRIPTION

SUBMITTED BY:	DATE

APPROVED BY:	DATE

HUHAA-PRO SERIES

ARCHITECT'S AND ENGINEER'S SPECIFICATIONS*

- Unit mounts either horizontally or vertically. Totally versatile. For factories, warehouses, garages, stores, shipping rooms, power stations. Can be used for primary, supplementary, spot, or dual-system eating.
- Each PRO model comes with a built in single stage thermostat, disconnect switch, and 24VAC transformer.
- Each PRO-SSP model comes with a remote mount SmartSeries Plus control, disconnect switch, 24VAC transformer, and B10 mounting bracket all included in the same box.
- PRO-SSP models' SmartSeries® Plus thermostat allows connection to BACnet MS/TP Building Management Systems, along with a digital touchscreen, 7-day programmability, built-in cooling and vacation mode, and keypad lock with no extra components needed.
- Forced air unit heater with 4 power ratings; from 3KW to 10kw (10,326-34,121 btu/h) heating output; 208, 240, 277 and 480V.
- 24 compatible models (no need to try to assemble a heating system from 70 or 80 models!)
- Heavy 18 gauge die-formed steel housing. Finished with a durable, polyester powder coat finish to resist corrosion, and smartly styled adjustable stainless steel louvers.
- Advanced pull-through air flow design draws air across heating element for more even air distribution and cooler element operation.
- Specially designed venturi outlet to meet that added throw as required in vertical position.
- Branch circuit fusing (when required).
- Completely enclosed fan motor.
- 1- or 3-phase wiring on 5 through 10 KW 208/240V units (field interchangeable).
- Aluminum-finned, copper clad steel sheath heating element has longer useful life, because of cooler sheath temperature and faster heat dissipation .
- 24V control transformer standard on all models, providing a safer and more accurate means of temperature control.
- Automatic reset linear thermal cut-out, capillary type, provides protection over entire length of element areas (Manual reset protection available on made-to-order basis).
- Fan delay feature eliminates cold drafts. Element heats up before fan cuts in, then fan continues to distribute heat after element shuts off.
- Ruggedly built, yet lighter weight for easier installation. No piping flutes, valves, or traps.
- Individually adjustable discharge louvers to control air flow.
- Choice of optional diffusers for variety of air patterns, maximizing heat concentration and coverage in the vertical position.
- Meets all UL, NEC, and OSHA requirements.

**Berko reserves the right to change specifications without prior notice.*

Dimensions and Clearances:

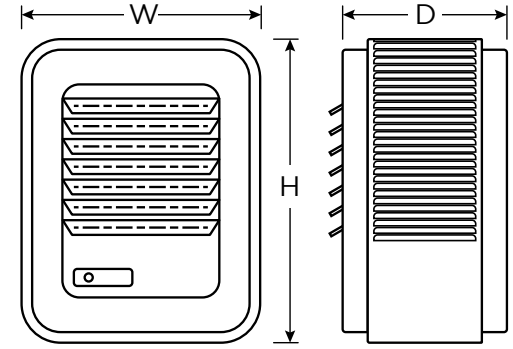

CATALOG NO.	HEIGHT	WIDTH	DEPTH
HUHAA 3 & 5	16″	14″	7 ½″
HUHAA 7 & 10	21 ¾″	19″	7 ½″

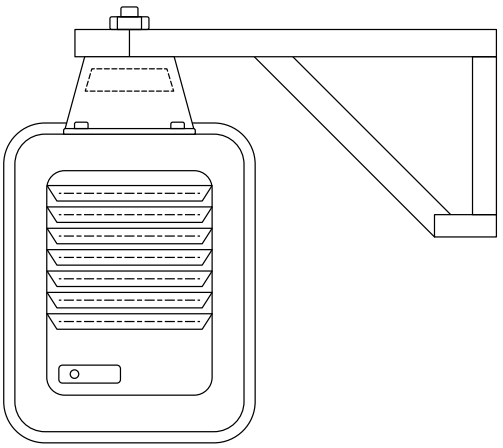

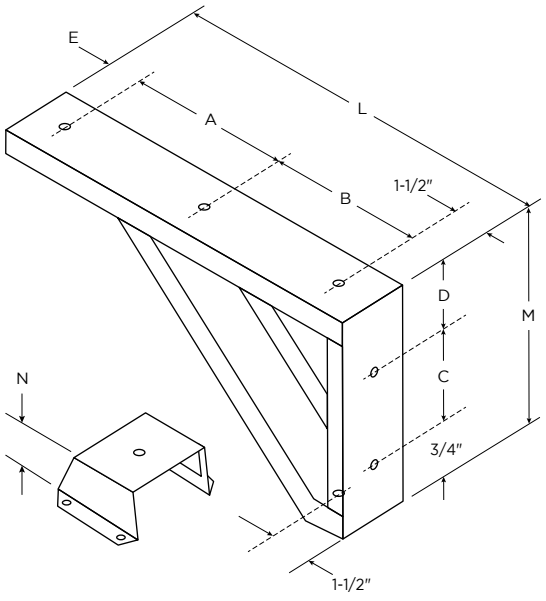

	3–20 kW
A	7 ¼″
B	9 ½″
C	7 ¼″
D	11 5⁄16″
E	2 ¼″
L	20 ½″
M	9 15⁄16″
N	3 ¼″

Approvals: _____ _____ _____

Models & Specifications:

ITEM INFORMATION		ELECTRICAL DATA					AIR DELIVERY DATA FAN MOTOR DATA	
CATALOG NO.	UPC	VOLTS	PHASE	KW	AMPS	CONTROL VOLT	CFM	SHIP WT.*
HUHAA320-PRO	685360174297	208	1	3	14.5	24	350	27 lbs
HUHAA320-PRO-SSP	685360174747	208	1	3	14.5	24	350	27 lbs
HUHAA520-PRO	685360173993	208	1–3	5	24	24	350	27 lbs
HUHAA520-PRO-SSP	685360174792	208	1–3	5	24	24	350	27 lbs
HUHAA720-PRO	685360174020	208	1–3	7.5	36	24	650	38 lbs
HUHAA720-PRO-SSP	685360174808	208	1–3	7.5	36	24	650	38 lbs
HUHAA1020-PRO	685360173931	208	1–3	10	48	24	650	38 lbs
HUHAA1020-PRO-SSP	685360174594	208	1–3	10	48	24	650	38 lbs
HUHAA324-PRO	685360173979	208/240	1	2.2/3.0	11.0/12.5	24	350	27 lbs
HUHAA324-PRO-SSP	685360174754	208/240	1	2.2/3.0	11.0/12.5	24	350	27 lbs
HUHAA524-PRO	685360174006	208/240	1–3	3.7/5.0	18.0/21.0	24	350	27 lbs
HUHAA524-PRO-SSP	685360174785	208/240	1–3	3.7/5.0	18.0/21.0	24	350	27 lbs
HUHAA724-PRO	685360174037	208/240	1–3	5.6/7.5	27.0/31.3	24	650	38 lbs
HUHAA724-PRO-SSP	685360174815	208/240	1–3	5.6/7.5	27.0/31.3	24	650	38 lbs
HUHAA1024-PRO	685360173955	208/240	1–3	7.5/10.0	36.0/42.0	24	650	38 lbs
HUHAA1024-PRO-SSP	685360174723	208/240	1–3	7.5/10.0	36.0/42.0	24	650	38 lbs
HUHAA348-PRO	685360173986	480	3	3	3.6	24	350	27 lbs
HUHAA348-PRO-SSP	685360174761	480	3	3	3.6	24	350	27 lbs
HUHAA548-PRO	685360174013	480	3	5	6	24	350	27 lbs
HUHAA548-PRO-SSP	685360174778	480	3	5	6	24	350	27 lbs
HUHAA748-PRO	685360174044	480	3	7.5	9	24	650	38 lbs
HUHAA748-PRO-SSP	685360174822	480	3	7.5	9	24	650	38 lbs
HUHAA1048-PRO	685360173948	480	3	10	12	24	650	38 lbs
HUHAA1048-PRO-SSP	685360174730	480	3	10	12	24	650	38 lbs

"1-3" phase denotes field convertible to 3-Phase

NOTE: All standard units are supplied with a low voltage control transformer and contactor (24V). Reference the appropriate Bundled Accessory table below for the standard accessories available out of the box with each PRO and PRO+ model. Shipping weight includes mounting bracket

On dual-voltage units CFM, FPM, & RPM ratings are listed at higher voltage operation. On dual-phase units maximum amp draw is listed for respective voltage.

HUHAA-Pro Bundled Accessories:

ACCESSORY	DESCRIPTION
24VAC Transformer	Takes incoming line voltage and drops it to low voltage (24VAC) to be used with low voltage thermostats.
Disconnect Switch	A three pole non-fused disconnect switch disconnects power to the heater. Design prevents entry into the control compartment until disconnect switch is turned to the OFF position.
Built-In Single Stage Thermostat	Built-in single stage thermostat with adjustable knob to have heater run until demand is satisfied.

HUHAA-Pro+ Bundled Accessories:

ACCESSORY	DESCRIPTION
24VAC Transformer	Takes incoming line voltage and drops it to low voltage (24VAC) to be used with low voltage thermostats.
Disconnect Switch	A three pole non-fused disconnect switch disconnects power to the heater. Design prevents entry into the control compartment until disconnect switch is turned to the OFF position.
SmartSeries® Plus thermostat	Remote Mount two stage thermostat runs 2/3 elements on stage 1 and full heat for stage 2. Fan cycles on high speed only. Comes with BACnet BMS compatibility, scheduling, cooling mode (Fan-Only), and keypad lock.
B10 mounting bracket	Used to easily mount the unit heater to the wall

Approvals: _____ _____ _____

Optional Mounting Brackets:

	CATALOG NO.	UPC	COMPATIBILITY	SHIP WT.*
Standard	B10	685360152295	HUHAA 3–10	8 lbs
Ceiling	CMB10	685360152363	HUHAA 3–10	3 lbs
Vertical Ceiling	VDMB5	685360152455	HUHAA 3–5	5 lbs
	VDMB20	685360152462	HUHAA 7.5–20	7 lbs

Optional Dust Shields:

CATALOG NO.	UPC	COMPATIBILITY	SHIP WT.*
JRDS8	685360150697	3–10 KW units	5 lbs

MOUNTING LIMITATIONS: Unit heaters should not be used in potentially explosive atmospheres. The finish is not intended for direct salt spray exposure in marine applications or the highly corrosive atmospheres of swimming pools, chemical storage bins, etc. Do not install unit heaters above recommended maximum mounting height. Obstructions must not block unit heater air inlet or discharge. Heaters must be mounted at least 7 ft. above the floor to prevent accidental contact with the heating element or fan blade which could cause injury.

Diffuser Selector Tables for Vertical Mounting

CATALOG NO.	DESCRIPTION	COMPATIBILITY	MAX. MOUNTING HEIGHT	(A) DIMENSION	DIFFUSER PATTERN AND AREA
—	**No Diffuser:** No diffuser needed where a straight downflow air pattern is required. For maximum air throw, remove louvers. Any of three diffusers can be added to basic heater.	HUHAA 3–5	9	18 (A)	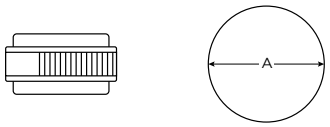
—		HUHAA 7–10	14	26 (A)	
MLDS	**Louver Diffuser:** Permits directional (straight line) air flow as in air curtain application over doorways. Rectangular coverage, Louvers can be turned in either direction.	HUHAA 3–5	9	25(A) 12(B)	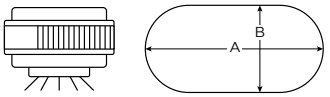
MLDM		HUHAA 7–10	14	39(A) 19(B)	

No matter the industry or application, Marley Engineered Products has a robust portfolio of innovative, reliable, high-performance comfort heating and ventilation solutions for all your heating needs.

For more information or assistance on your next project, contact Technical Services at 800-642-4328

Scan the QR code to access additional specs and features

Approvals: _____ _____ _____