Marley Engineered Products

High Velocity Series Air Curtains

INSTALLATION & OPERATING INSTRUCTIONS & PARTS MANUAL

FOR ALL 208-230/480 VOLT 3 PHASE. MOTOR MODELS

READ CAREFULLY BEFORE ATTEMPTING TO ASSEMBLE, INSTALL, OPERATE, OR MAINTAIN THE PRODUCT DESCRIBED. PROTECT YOURSELF AND OTHERS BY OBSERVING ALL SAFETY INFORMATION. FAILURE TO COMPLY WITH INSTRUCTIONS COULD RESULT IN PERSONAL INJURY AND/OR PROPERTY DAMAGE!

RETAIN INSTRUCTIONS FOR FUTURE REFERENCE.

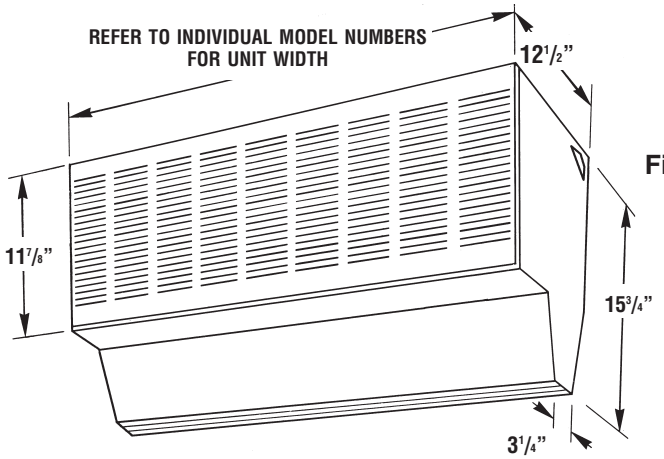

Fig. 1

Figure 1 Dimensions

Note that all dimensions are the same on all high velocity series units. Model number indicates width of unit. (Example: EL4800 indicates a 48" wide unit.)

Description

Leading Edge air curtains produce a wall of continuously flowing air that acts as a thermal barrier against outside air and flying insects. These air curtains maintain interior conditioned temperature and prevent heated or cooled air from escaping through open doorways. They reduce humidity and loss of cold air when used over freezer and cooler doors. High traffic area doors can be left open, eliminating wear and nuisance of opening and closing automatic and manual doors. Used over service entrances, receiving doors, customer entrances, access doors, etc. ... air curtains provide protection against insects, dust, odor, fumes and other contaminant's.

Unpacking

1. With packaged unit on the floor, carton arrows should point upward.
2. Carefully remove staples from top of carton and fold back sides.

Specifications and Performance

HP	MAX. RPM	208-230/480 50/60Hz MAX. AMPS	MAX. FT. PER MIN. AT NOZZLE	AVG. CFM AT NOZZLE FOR MOTOR SHOWN IN VARIOUS CABINET SIZES		
				36"	48"	60"
1	1725	3.2	5250	3400	4200	4960
1 1/2	3450	4.0	5900	3345	4080	4780
3	3450	8.3	7200	4080	4980	5830

Unpacking (Continued)

3. Carefully remove cabinet from carton by lifting out unit using straps provided.

CAUTION: Do not attempt to lift this air curtain by its louver or damage may result.

4. Unscrew six (6) knurled nuts and remove air intake grille. (See Figure 2.)

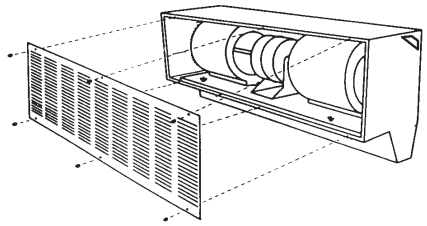

Figure 2 - Removing Air Intake Grille

5. Carefully disconnect motor electric cord plug assembly and remove two wing nuts on blower base. (See Figure 3.)

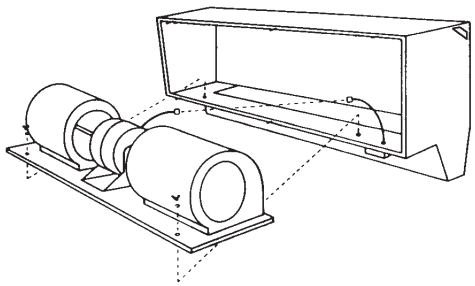

Figure 3 - Removing Motor/Blower Assembly

6. To remove motor/blower assembly, lift from rear of motor housing to prevent damage and misalignment to shaft and blower wheels.

NOTE: After unpacking unit, inspect carefully for any damage that may have occurred during transit. Check for loose, missing or damaged parts.

IMPORTANT SAFETY INFORMATION
"READ AND SAVE THESE INSTRUCTIONS"

WARNING - TO REDUCE THE RISK OF FIRE, ELECTRIC SHOCK, OR INJURY TO PERSONS OBSERVE THE FOLLOWING:

1. Use this unit only in the manner intended by the manufacturer. If you have questions contact the manufacturer.
2. Before servicing or cleaning unit, switch power off at service panel and lock service disconnection means to prevent power from being turned on accidentally. When the service disconnecting means cannot be locked securely fasten a prominent warning device, such as a tag, to the service panel.
3. Installation work and electrical wiring must be done by qualified persons in accordance with all applicable codes and standards, including fire rated construction.
4. When cutting or drilling into wall or ceiling, do not damage electrical wiring or other hidden utilities.
5. Make certain that the power source conforms to the electrical requirements of the unit. Disconnect power before installing or servicing. If the power disconnect is out of sight, lock it in the open position and tag it to prevent unexpected application of power. Failure to do so could result in fatal electrical shock.

WARNING: DO NOT DEPEND UPON A THERMOSTAT OR OTHER SWITCH AS THE SOLE MEANS OF DISCONNECTING POWER WHEN INSTALLING OR SERVICING THE UNIT. ALWAYS DISCONNECT POWER AT THE MAIN CIRCUIT BREAKER AS DESCRIBED ABOVE. FAILURE TO DO SO COULD RESULT IN FATAL ELECTRIC SHOCK.

WARNING: TO REDUCE THE RISK OF FIRE OR ELECTRIC SHOCK, DO NOT USE THIS AIR CURTAIN WITH ANY SOLID STATE SPEED CONTROL DEVICE.

6. All wiring should be done by a qualified electrician, using copper wire only and in accordance with the National Electrical Code (NEC), all applicable code and ordinances, and all sections of this manual. Any variance voids the warranty and may create unsafe conditions.
7. Special attention must be given to any grounding information pertaining to this product. To prevent the risk of electrocution, the unit must be securely and adequately grounded. This should be accomplished by connecting a grounded conductor between the service panel and the grounding lug or green lead wire provided in the wiring compartment. To ensure a proper ground, the grounding means must be tested by a qualified electrician.
8. Do not insert fingers or foreign objects into the air curtain. Do not block or tamper with it in any manner while it is in operation. Do not touch it while in operation or just after it has been turned off, as some parts may be hot enough to cause injury.
9. This product must NOT be used in potentially dangerous locations such as hazardous locations where flammable, explosive, chemical laden, or wet atmospheres are present.
10. Do not attach ductwork to this product. Such use voids the warranty and may create unsafe conditions.
11. This product is suitable for commericial or industrial use only.

CAUTION:
To reduce the risk of injury to persons, install this unit at least 2.1m (7ft.) above the floor.

Installation

NOTE: ALL INSTALLATION SHOULD BE DONE TO MEET LOCAL BUILDING CODES.

1. Using template provided, determine mounting location.

IMPORTANT: IN FREEZER APPLICATIONS, UNIT IS ALWAYS MOUNTED OUTSIDE (WARM SIDE) OF FREEZER OR COOLER

2. Drill holes and attach mounting hardware (not included).

IMPORTANT: THE HARDWARE AND THE SUPPORTING STRUCTURE MUST BE CAPABLE OF SUPPORTING A MINIMUM 150 LB. LOAD.

3. Mount cabinet on wall and securely tighten hardware.
4. Replace motor/blower assembly in cabinet. Secure two wing nuts on blower base. Reconnect motor electric cord plug assembly.

ELECTRICAL CONNECTIONS

WARNING: ALL AIR CURTAINS SHOULD BE INSTALLED BY QUALIFIED PERSONNEL.

WARNING: THIS FAN HAS AN INTERNAL SELF-RESETTING THERMAL OVERLOAD PROTECTOR. ALWAYS DISCONNECT FROM POWER SUPPLY BEFORE SERVICING.

1. Connect motor per name plate to correct power supply. Use adequate size wire for all branch and feeder runs.
2. Install all wiring, protection and grounding in accordance with the National Electrical Code (NEC) and all local requirements.
3. Remove two (2) screws holding the Outlet Box Assembly in place. See Fig. A. Keep these screws. It will be required to re-install the assembly in step 6.
4. Remove the Outlet Box Assembly to expose knockouts for power supply wiring. Remove assembly be unlatching the bottom of the assembly from the back of the cabinet. Put assembly aside for now to make supply connections. Lable on blower indicates voltage connection of motor from factory. Compare with voltage on nameplate and make sure the power supply to the disconnect that will feed the unit are the same voltage.
5. Run wires from power supply disconnect to the outlet box. Choose which knockout to use either from the back of the cabinet or from the top of the cabinet. Use appropriate wiring according to local code. Use a flexible connector to allow for possible angle adjustments if necessary. You may start connection of the power supply wire to the internal wire leads with the cable attached to the outlet box assembly. Use appropriate wire nuts (not provided). There will be just the three wires for each of the three phases to connect and the supply ground wire to the green ground lead which is connected to cabinet ground.
6. Re-install outlet box assembly by latching the bottom first and by using the two screws removed in step 3. Make sure all wires and connectors are inside the outlet box. Make sure no wire will be pinched between the outlet box and the cabinet back wall, the cabinet top and the cabinet right side panel.
7. From the outside of the cabinet on the top right corner, remove three (3) screws. Keep these screws. It will be needed to replace the outlet box cover. Carefully remove outlet box cover. Inspect all wires and make sure all connections are tight and the ground wires are properly connected. Replace outlet box cover. Put power on the the unit. Check for correct motor rotation. To change motor rotation, interchange any two wires at the power disconnect.
8. Unit is ready for operation.
9. Replace intake grille with louvers facing down and refasten knurled nuts.
10. Upon completion of all installations, inspect unit for excessive vibration during operation. If excessive vibration is noticeable, disconnect power supply, inspect mounting installation, and refer to troubleshooting chart for probable cause.

NOTES: Air Curtain Control

1. On/Off Control by hand – A three pole On/Off switch may be used or the Supply Disconnect Switch may also be used to put the unit on or off. A magnetic motor starter is not required with manual On/Off control.
2. When automatic On/Off function is required, a Motor Control Panel must be used. The Motor Control Panel can be such that a micro switch may control the On/Off function of the Panel. The micro switch may be any dry contact switch or a thermostat. The panel may be chosen such that the opening and closing of a door may control the closing and opening of a single pole contact of a door switch which in turn controls the On/Off of the contactor in the Control Panel which will turn the Air Curtain motors on and off.
3. These controls are all optional devices that are external of the Air Curtain. These can be installed between the Air Curtain and its Disconnect.
4. It is recommended all control devices to be used with these Air Curtain units should be UL and or CSA approved devices and all local codes be followed in their use and installation.

CAUTION: MAKE SURE AMP RATING OF ANY CONTROL DEVICE OR ON/OFF SWITCH EXCEEDS NAMEPLATE AMP RATING OF MOTOR.

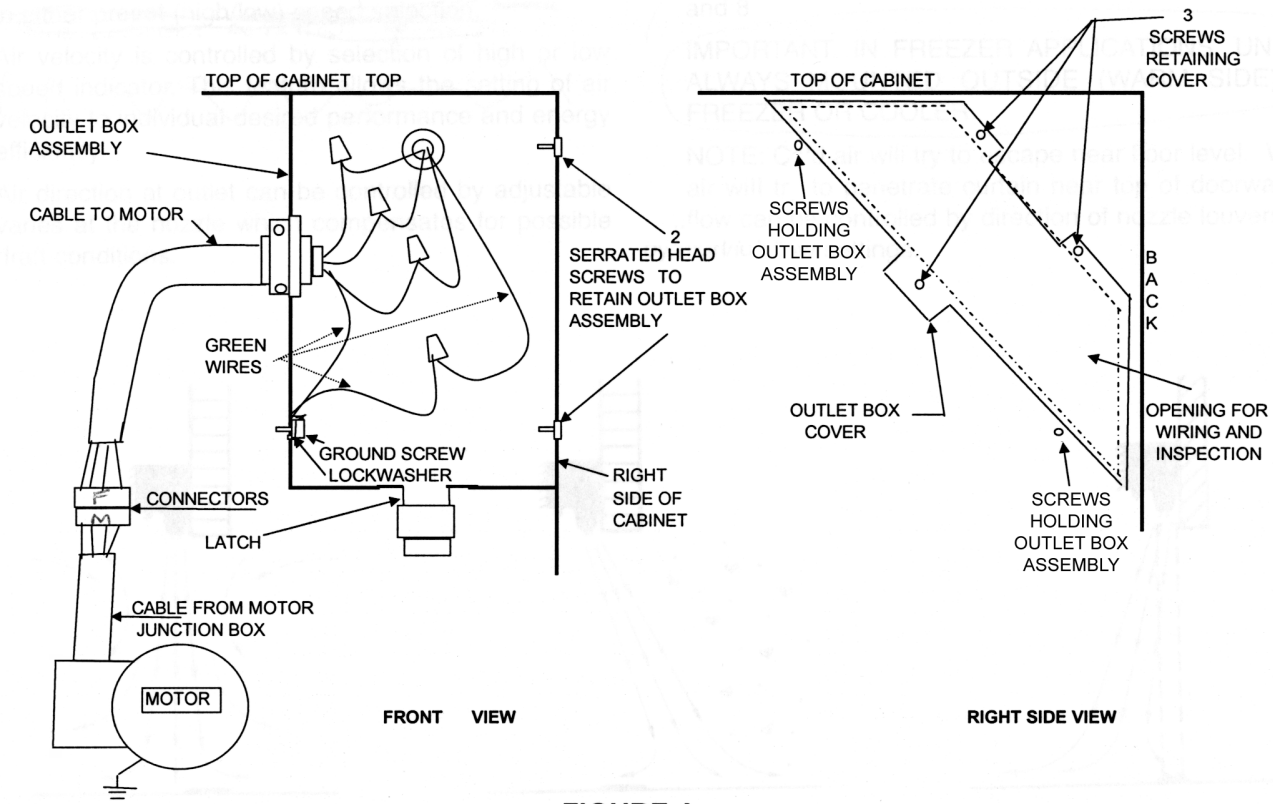

FIGURE A

OUTLET BOX FIELD WIRING

☐ 1, 1½ & 3 H.P. 3 PHASE

☐ LOW VOLTAGE 208-230V

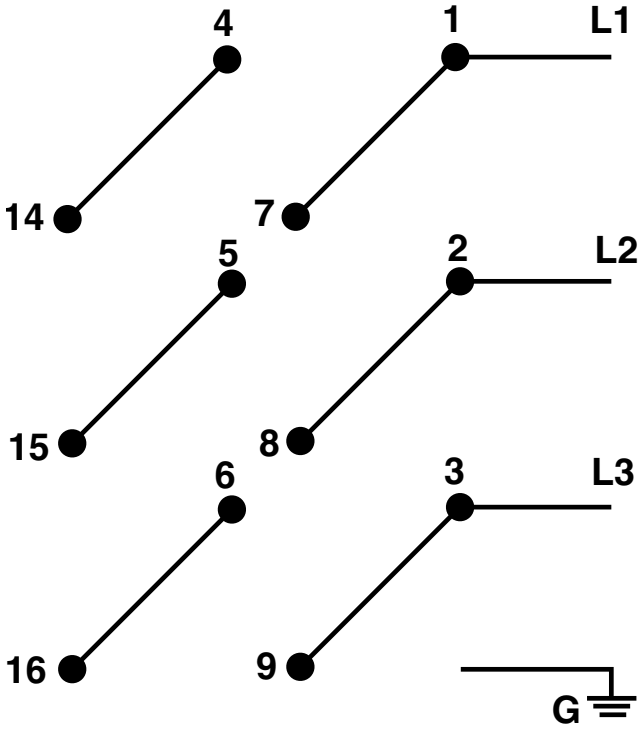

☐ HIGH VOLTAGE 480V

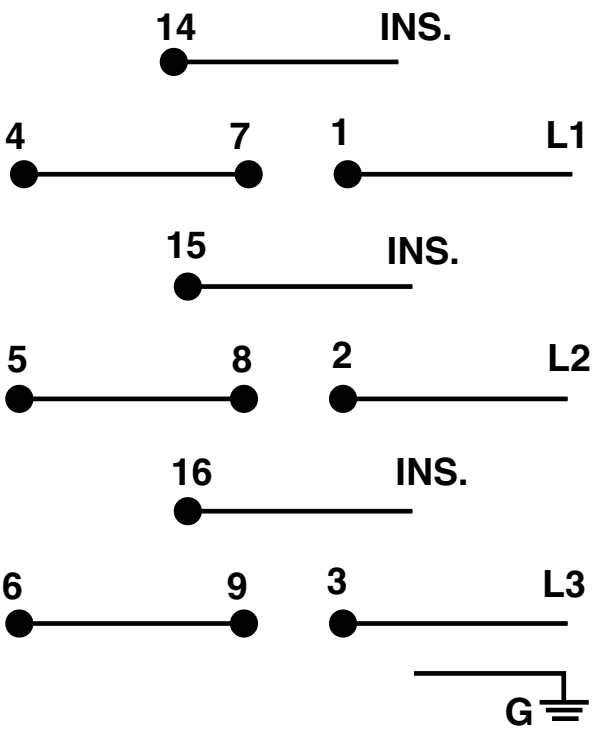

FIGURE 4

Wiring Diagrams for 208-230V or 480V

Operation

1. After power has been connected to unit, fans will start.

2. Air direction at outlet can be controlled by adjustable vanes at the nozzle which compensates for possible draft conditions.

NOTE: Air direction settings are shown in Figures 5, 6, and 7.

NOTE: Cold air will try to escape near floor level. Warm air will try to penetrate curtain near top of doorway. Air flow can be controlled by direction of nozzle louvers and by high/low settings.

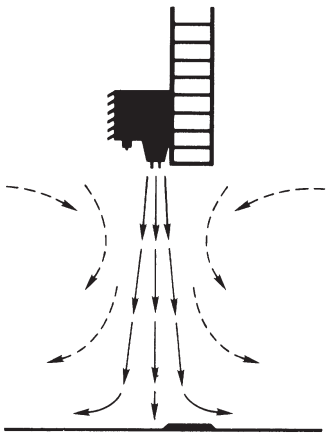

Figure 5 - Desired Air Flow Adjustment for Temperature and Humidity Control.

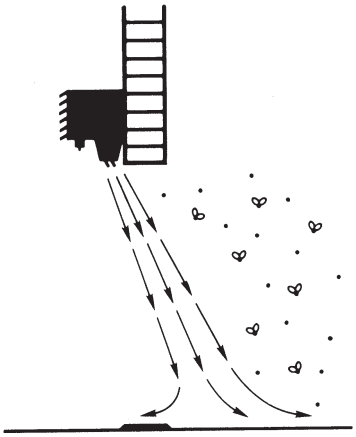

Figure 6 - Desired Air Flow Adjustment for Insect and Dust Control.

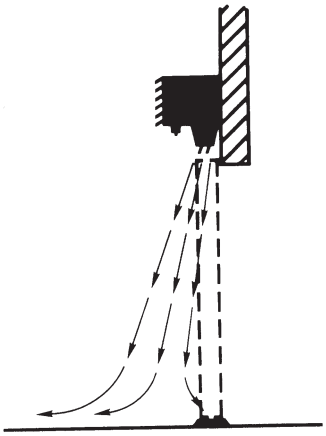

Figure 7 - Desired Air Flow Adjustment for Freezer and Cooler Applications.

Maintenance

WARNING: ALWAYS DISCONNECT POWER SUPPLY BEFORE SERVICING.

LUBRICATION

Ball bearings are permanently lubricated and require no further lubrication.

CLEANING

1. The air door cabinet may be wiped off with a damp cloth. Do not allow motor to get wet. Do not use solvents or harsh detergents.

NOTE: Keep air intake louvers clear of dirt and dust accumulation which could affect performance.

2. Check blower wheels for accumulated dirt twice a year and clean. If disassembly is required, see GENERAL SERVICING section.

GENERAL SERVICING

WARNING: IF SERVICING IS REQUIRED, IT SHOULD BE DONE BY QUALIFIED PERSONS ONLY.

WARNING: ALWAYS DISCONNECT POWER SUPPLY BEFORE SERVICING.

1. Remove motor/blower assembly. All motor/blower assemblies are designed for easy removal and service with wing nuts and quick disconnect electrical connections.
2. Place motor/blower assembly on workbench.
3. To replace blower wheel, remove the three slotted hex head screws on outer blower ring assembly (See Figure 9, Replacement Parts Illustration.) The wheel is held onto shaft by one hex head screws.

IMPORTANT: NOTE POSITION OF WHEELS TO PREVENT RUBBING WHEN REPLACED.

4. To remove motor:
   a. Remove blower wheels. (See Step 3 above.)
   b. Remove blower scroll (six hex head screws).
   c. Unscrew and remove motor mounts.
5. Replace motor/blower assembly.

Troubleshooting Chart

SYMPTOM	POSSIBLE CAUSE(S)	CORRECTIVE ACTION
Fan inoperative	1. Blown fuse or open circuit breaker. 2. Electricity turned off. 3. Loose cord connection. 4. Defective motor.	1. Replace fuse or reset circuit breaker. 2. Contact local power company. 3. Re-check all connections. 4. Replace.
Excessive noise	1. Wheel rubbing on housing. 2. Motor base or blower not securely anchored. 3. Defective motor bearings.	1. Center wheel. 2. Tighten mounting bolts. 3. Replace motor.
Insufficient air flow	1. Improper voltage. 2. Outlet louvers closed. 3. Intakes obstructed. 4. Dirty blower wheels 5. Motors rotate in the wrong direction	1. Reconnect to proper voltage. 2. Open. 3. Remove any obstruction. 4. Clean. 5. Interchange any two supply wires to unit
Fans cut out on thermal overload (self-resets)	1. Low voltage. 2. Obstruction to blower wheel.	1. Verify correct wire size. 2. Remove obstruction.

Replacement Parts For Air Curtain Cabinets

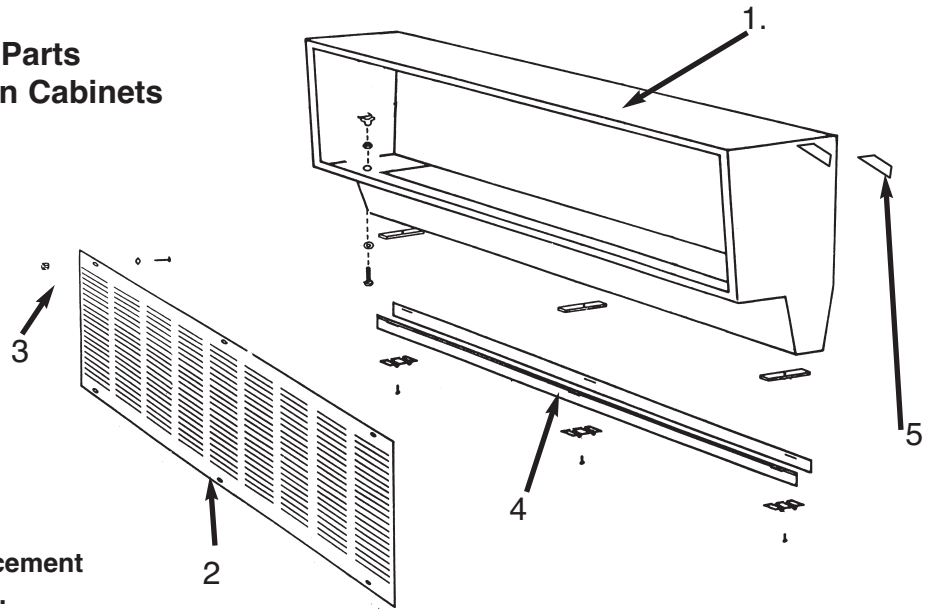

Figure 9 - Replacement Parts Illustration.

Replacement Parts List For Air Curtain Cabinets

Key No.	Description	Part Numbers for Cabinets (length)				
		36"	38"	42"	48"	60"
1	Cabinet box assembly	1016-0096-000	1016-0096-001	1016-0096-002	1016-0096-003	1016-0096-004
2	Cabinet Intake Grille	1016-0093-000	1016-0093-001	1016-0093-002	1016-0093-003	1016-0093-004
3	Cabinet Intake grill knurled nut	AP0002	AP0002	AP0002	AP0002	AP0002
4	Cabinet louver kit	ACL36	ACL38	ACL42	ACL48	ACL60
5	Electric box cover	1402-2364-001	1402-2364-001	1402-2364-001	1402-2364-001	1402-2364-001

Replacement Parts For Motor Blower Assemblies (6)

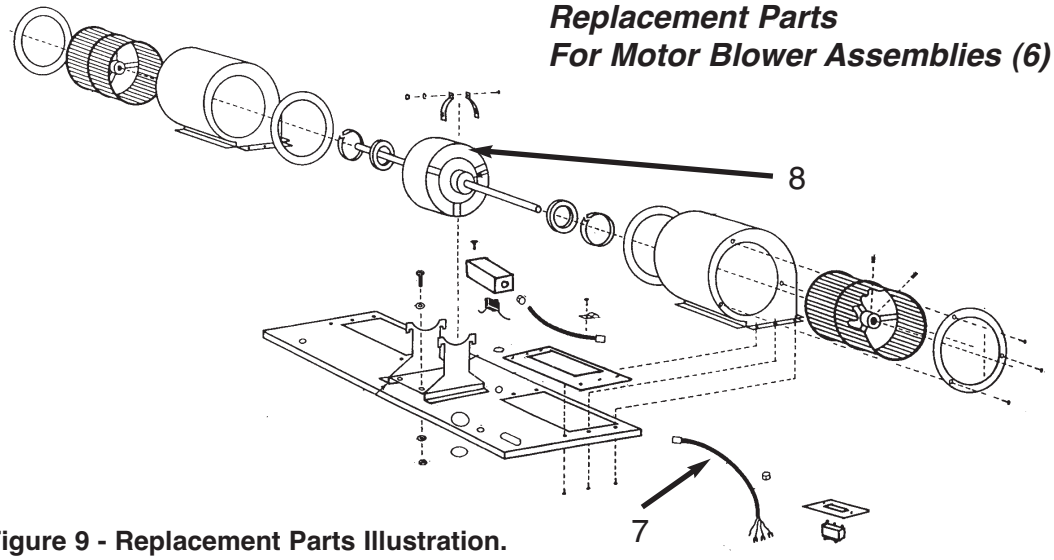

Figure 9 - Replacement Parts Illustration.

Replacement Parts For Air Curtain Cabinets

Key No.	Description	Part Numbers for Motor Blower Assemblies		
		1HP	1-1/2HP	3 HP
6	Motor/Blower Assembly	ACMB300	ACMB305	ACMB330
7	Cord, female connector	ACWS616	ACWS614	ACWS314
8	Motor Assembly	ACM3075	ACM3150	ACM3300

LIMITED WARRANTY

All products manufactured by Marley Engineered Products are warranted against defects in workmanship and materials for five years from date of installation. This warranty does not apply to damage from accident, misuse, or alteration; nor where the connected voltage is more than 5% above the nameplate voltage; nor to equipment improperly installed or wired or maintained in violation of the product's installation instructions. All claims for warranty work must be accompanied by proof of the date of installation.

The customer shall be responsible for all costs incurred in the removal or reinstallation of products, including labor costs, and shipping costs incurred to return products to Marley Engineered Products Service Center. Within the limitations of this warranty, inoperative units should be returned to the nearest Marley authorized service center or the Marley Engineered Products Service Center, and we will repair or replace, at our option, at no charge to you with return freight paid by Marley. It is agreed that such repair or replacement is the exclusive remedy available from Marley Engineered Products.

THE ABOVE WARRANTIES ARE IN LIEU OF ALL OTHER WARRANTIES EXPRESSED OR IMPLIED, AND ALL IMPLIED WARRANTIES OF MERCHANTABILITY AND FITNESS FOR A PARTICULAR PURPOSE WHICH EXCEED THE AFORESAID EXPRESSED WARRANTIES ARE HEREBY DISCLAIMED AND EXCLUDED FROM THIS AGREEMENT. MARLEY ENGINEERED PRODUCTS SHALL NOT BE LIABLE FOR CONSEQUENTIAL DAMAGES ARISING WITH RESPECT TO THE PRODUCT, WHETHER BASED UPON NEGLIGENCE, TORT, STRICT LIABILITY, OR CONTRACT.

Some states do not allow the exclusion or limitation of incidental or consequential damages, so the above exclusion or limitation may not apply to you. This warranty gives you specific legal rights, and you may also have other rights which vary from state to state.

For the address of your nearest authorized service center, contact Marley Engineered Products in Bennettsville, SC, at 1-800-642-4328. Merchandise returned to the factory must be accompanied by a return authorization and service identification tag, both available from Marley Engineered Products. When requesting return authorization, include all catalog numbers shown on the products.

HOW TO OBTAIN WARRANTY SERVICE AND WARRANTY PARTS PLUS GENERAL INFORMATION

1. Warranty Service or Parts **1-800-642-4328**
2. Purchase Replacement Parts **1-800-654-3545**
3. General Product Information **www.marleymep.com**

Note: When obtaining service always have the following:

1. Model number of the product
2. Date of manufacture
3. Part number or description

Marley Engineered Products
470 Beauty Spot Rd. East
Bennettsville, SC 29512 USA

ECR 36787

Part No. 5200-2410-002 11/07