ASSEMBLY INSTRUCTIONS & PARTS MANUAL FOR



MODEL: 5630-1RDP

LEADING EDGE®
A Marley Engineered Products Brand

REVERSIBLE CEILING FANS

CEILING FANS SHOULD BE INSTALLED BY QUALIFIED INSTALLER.

SPECIFICATIONS

MODEL NUMBER	BLADE SWEEP	COLOR	VOLTAGE	MAX HZ	MAX RPM	MAX AMPS	WATTS	WT (LBS)
5630-1RDP	56”	White	120	50/60	275	1.0	110	24

READ INSTRUCTIONS CAREFULLY BEFORE ATTEMPTING TO ASSEMBLE OR SERVICE THE LEADING EDGE CEILING FAN. FAILURE TO COMPLY WITH INSTRUCTIONS COULD RESULT IN PERSONAL INJURY AND/OR PROPERTY DAMAGE.

RETAIN FOR FUTURE REFERENCE.

General Safety Information

WARNING: DISCONNECT POWER BEFORE INSTALLING OR SERVICING THIS EQUIPMENT.

1. All electrical wiring should be done by a qualified electrician in accordance with applicable National Electrical Code and local electrical codes.
2. Do not allow moving blades to come in contact with any part of the body.
3. Mount fan so that fan blades are 10 feet or higher from floor.
4. Make sure hanger hooks are mounted securely to structural ceiling members.
5. Do not mount in an area which will allow the fan to get wet.

WARNING: DO NOT USE IN AN EXPLOSIVE ATMOSPHERE.

6. Make certain that the ground wire is connected to the ground terminal and to a suitable electrical ground.

NOTE: When mounted in cathedral ceilings, the blade tip should be at least 12 inches from the angled roof line to prevent air “blow back” causing possible fan sway.

CAUTION: Read and follow instructions carefully. Failure to comply with instructions could result in the risk of fire, shock, and injury to persons.

WARNING: TO REDUCE THE RISK OF PERSONAL INJURY DO NOT BEND THE BLADE BRACKETS WHEN INSTALLING THE BRACKETS OR CLEANING THE FAN. DO NOT INSERT FOREIGN OBJECTS IN BETWEEN ROTATING FAN BLADES.

Description

Leading Edge Fans are designed as a dual purpose product. By minimizing temperature stratification in winter, they can reduce heating costs in high bay buildings. The summertime application provides a gentle downward movement of air for general air recirculation and evaporative cooling. A permanent split capacitor motor and permanently lubricated ball bearings add to the efficiency and quietness of the fans.

Unpacking

1. Remove fan components from carton carefully.
2. Check for shipping damage.
3. Check for missing parts against parts list.

RECOMMENDED MOUNTING HEIGHTS

For heat reclamation, this fan should be mounted on the standard 2’ downrod included. On installations through drop ceilings, note the diameter of the downrod hole in the ceiling should be 2½”.

CAUTION: Fan blades should not be mounted lower than 10 feet above the floor.

Assembly

This fan includes a “secondary support” safety cable feature that complies with existing C.S.A. (Canadian Standards Association) requirements and all other proposed safety regulations for overhead air movement equipment. To insure proper installation of this important safety feature, please read and follow these instructions carefully.

1. Carefully unwrap the coiled safety cable and motor lead wires.
2. At the motor yoke assembly (A), remove the cotter pin and loosen the hexagon nut. Carefully remove spring washer and the hexagon screw (E). ***(See Figure 1)***
3. Slide the upper canopy cover (B) (bell shaped) up the rod. Slide the lower canopy cover (C) up to rod.
4. Feed the five wires and the safety cable through the center hole in the steel yoke connecting piece above the motor (A) and then continue feeding wires and cable through the downrod until the wires and cable come out at the upper (shackle) end.
5. Mount the downrod to the yoke (A) and replace the hexagon screw. Secure the spring washer hexagon nut and spread the coffer pin.

NOTICE: The safety cable should be taped to one side of the yoke with electrical tape to prevent the cable from resting on top of motor during running operation. ***(See Figure 2)***

6. Slide the lower canopy (C) to be a 1/4” minimum height above the motor.

CAUTION: Do not allow the permanently installed lower canopy to touch the revolving motor as damage will occur. Make sure all wires are securely placed to avoid rubbing against the motor.

7. Attach the three blades, curved side down to the motor with the insulation pad mounted between the blade and the motor. Make sure blade holder is flat against motor platform when tightening blade nuts for secure fit.

CAUTION: Blades must be fastened to the motor as shown in Figure 1. DO NOT reverse blades when installing.

NOTE: Blades are weight balanced per set. DO NOT mix on multiple fan installations.

NOTE:Do not bend fan blade brackets.

WARNING: DISCONNECT CIRCUIT POWER BEFORE MAKING ANY ELECTRICAL CONNECTIONS.

CAUTION: To reduce the risk of personal injury, install the primary mounting directly from building structure and use only the hardware provided with the fan.

8. Before attaching the appropriate “J” hook to the building structure member note the following:

IMPORTANT. WHEN MOUNTING THIS FAN, THE SUPPORT BEAM MUST BE SUITABLE FOR A 50 POUND LOAD LIMIT.

CAUTION: If Pilot hole is used with the wood thread hook, the pilot hole should be drilled no larger than the minor diameter of the screw threads on the hook. Do not put lubricant on the “J” hook. At least $1^{1}/_{2}$” of the screw threads should be secured Into the structural wood joist. When the threaded bolt hook is used, be careful to secure tightly with supplied lockwashers and nuts. Attach the hook as instructed and hang the fan.

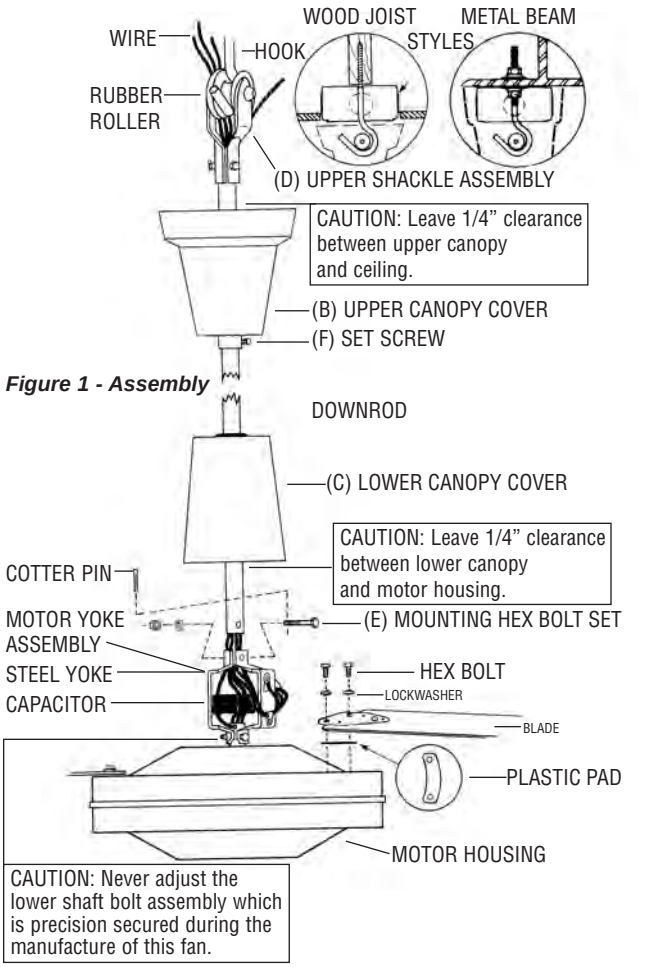

Figure 1 - Assembly

CAUTION: Make sure that blades are attached as shown.

9. This fan is equipped with the required “secondary support” cable. This cable must-be affixed to the beam structures and securely clamped in such a maner to support the weight of the fan in the event the mounting hook or other parts fail. After wrapping cable around a structural member that will support 300 lbs., secure cable with supplied cable clamps as illustrated in Figure 3. (Note: Any additional materials needed for specific installations may be purchased from your local distributor.)

NOTICE: Leave approximately 3” but no more than 5” of slack on this safety cable to allow for possible fan movement. Do not exceed more than 5” total slack.

IMPORTANT CAUTION: The safety cable must not be placed between the rubber roller and hook but as illustrated in Figure 3.

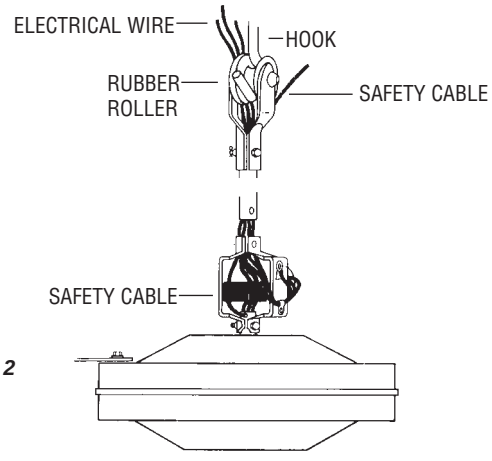

Figure 2

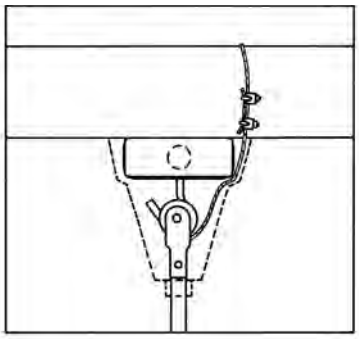

Figure 3

10. When hanging fan on factory supplied "J" hook, make sure cable at top of rod is positioned behind "J" hook as illustrated in Figure 3.

IMPORTANT NOTICE: It is important to note proper installation position of the cable clamps as illustrated in Figure 4. To obtain maximum holding power, install U-bolt section of clip on dead or short end of cable and saddle on long end of cable. Improper installation reduces the efficiency of the connection by as much as 40 percent.

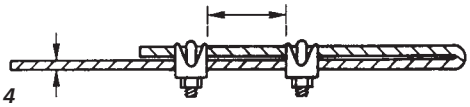

Figure 4

WARNING: DISCONNECT CIRCUIT POWER BEFORE MAKING ANY ELECTRICAL CONNECTIONS.

11. Run the wires from the downrod assembly to the electrical supply using appropriate wiring in accordance with the local code. Connect with listed wire connectors available from your local distributor. Connect red to black of power supply, brown to white of power supply, black to connection #1 on toggle switch, white to connection #3 on toggle switch, and green grounding lead to the grounded conductor of the supply circuit. To energize reversible toggle switch take jumper from black of power supply to #2 on toggle and take jumper from white power supply to #4 on toggle (see Figure 5). No loose strands or loose connections should be present. After splices are made, the wires should be spread apart so that the red and black are on one side of the outlet box and the white, brown and green are on the other side. Turn splices upward and carefully push all wiring into outlet box.

Figure 5

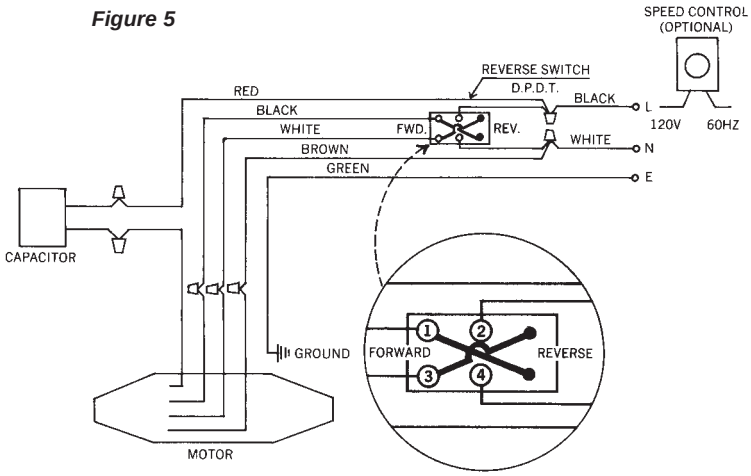

12. Slide the upper canopy (B) up the rod to within 1/4" of the ceiling or beam and securely tighten the set screw (F).
13. If a remote speed control is to be used refer to the installation instructions included with that control for proper installation and wiring.
14. Restore power.
15. After completing installation, test run fan in normal operating manner. Inspect for any possible shake or wobble which may be caused by binding as a result of "tight cable". If this should happen, shut off power supply and re-check instructions to correct problem.

NOTE: When any solid state motor speed control is used, a humming noise will be present in the fan on low speed. This hum in no way affects the operation of the fan and is acceptable in most industrial installations.

CAUTION: Do not flip switch from forward to reverse or vice versa without waiting for motor to stop. Damage to motor or driven equipment can result.

Maintenance

WARNING: THIS FAN HAS AN INTERNAL SELF-RESETTING THERMAL OVERLOAD PROTECTOR. ALWAYS DISCONNECT FROM POWER SUPPLY BEFORE SERVICING.

LUBRICATION

All bearings are permanently lubricated and do not require further lubrication.

CLEANING

This fan may be wiped off with a damp cloth. Do not allow the motor to get wet. Do not use solvents or harsh detergent.

CAUTION: Before servicing or cleaning unit, switch power off at service panel and lock service disconnecting means to prevent power from being switched on accidentally. When the service disconnecting means cannot be locked, securely fasten a prominent warning device, such as a tag, to the service panel.

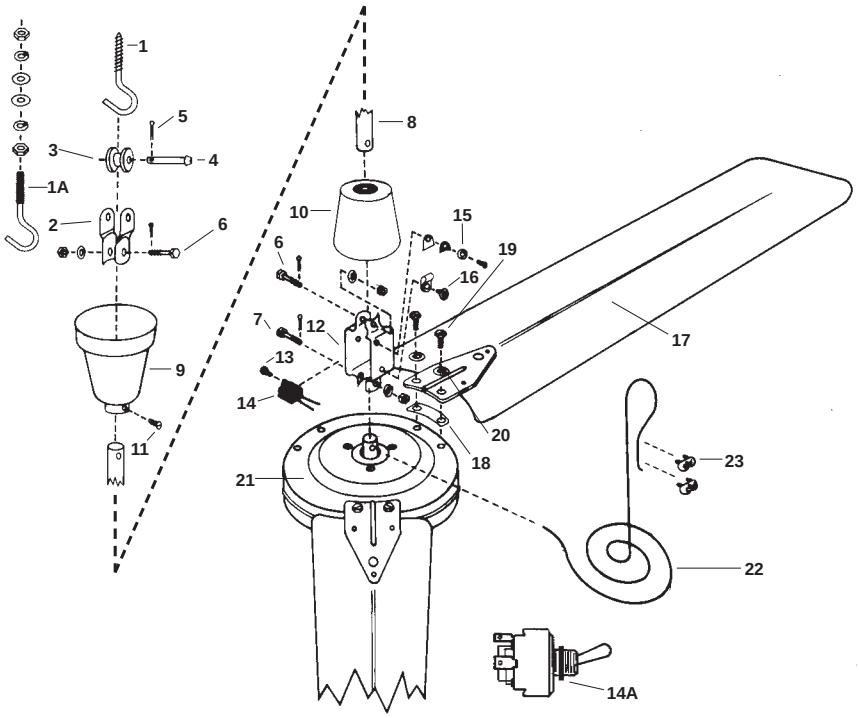

Replacement Parts For 5630-1RDP

REF. NO.	DESCRIPTION	PART NO.	QTY
1	"J" hook mounting bolt assembly	2100069A	1
1A	Wood screw hook	2100070A	1
2	Upper shackle	2100071A	1
3	Rubber roller	2100072A	1
4	Clevis Pin	2100073A	1
5	3/32 x 3/4" Cotter pin	*	1
6	1/4 x 1 1/2" Hex bolt assembly	*	2
7	1/4 x 1 1/8" Hex bolt assembly	*	1
8	24" Downrod pipe	2100101A	1
9	Upper canopy, bell shaped	2100075A	1
10	Lower canopy	2100076A	1
11	10-24 x 3/8" Canopy set screw	*	1
12	▲ Steel yoke	2100078A	1

REF. NO.	DESCRIPTION	PART NO.	QTY
13	▲ Capacitor clamp screw	2100080A	1
14	▲ Capacitor (5630-1RDP)	2100141A	1
14A	Toggle Switch	4100098A	1
	△ Switch Plate	2100099A	1
15	▲ Grounding screw assembly	2100082A	1
16	▲ Plastic cable clamp assembly	2100083A	1
17	† 56" Blade (5630-1RDP)	2100146A	3
18	Blade pad	3100053A	3
19	1/4" x 3/4" Blade screw	2100086A	6
20	1/4" Blade lockwasher	*	6
21	▲ 56" Motor Assembly (5630-1RDP)	2100120A	1
22	▲ Safety cable assembly	2100088A	1
23	▲ Cable clamps	2100089A	2

(▲) Included in motor assembly (2100120A).
(†) Replacement set of 3 only, white in color.
(*) Standard hardware item, available locally.
(△) Not shown.

LIMITED WARRANTY

All products manufactured by Marley Engineered Products are warranted against defects in workmanship and materials for one year from date of installation, except the motor which is warranted against defects in workmanship and materials for three years from date of installation. This warranty does not apply to damage from accident, misuse, or alteration; nor where the connected voltage is more than 5% above the nameplate voltage; nor to equipment improperly installed or wired or maintained in violation of the product's installation instructions. All claims for warranty work must be accompanied by proof of the date of installation.

The customer shall be responsible for all costs incurred in the removal or reinstallation of products, including labor costs, and shipping costs incurred to return products to Marley Engineered Products Service Center.Within the limitations of this warranty, inoperative units should be returned to the nearest Marley authorized service center or the Marley Engineered Products Service Center, and we will repair or replace, at our option, at no charge to you with return freight paid by Marley. It is agreed that such repair or replacement is the exclusive remedy available from Marley Engineered Products.

THE ABOVE WARRANTIES ARE IN LIEU OF ALL OTHER WARRANTIES EXPRESSED OR IMPLIED, AND ALL IMPLIED WARRANTIES OF MERCHANTABILITY AND FITNESS FOR A PARTICULAR PURPOSE WHICH EXCEED THE AFORESAID EXPRESSED WARRANTIES ARE HEREBY DISCLAIMED AND EXCLUDED FROM THIS AGREEMENT. MARLEY ENGINEERED PRODUCTS SHALL NOT BE LIABLE FOR CONSEQUENTIAL DAMAGES ARISING WITH RESPECT TO THE PRODUCT, WHETHER BASED UPON NEGLIGENCE, TORT, STRICT LIABILITY, OR CONTRACT.

Some states do not allow the exclusion or limitation of incidental or consequential damages, so the above exclusion or limitation may not apply to you. This warranty gives you specific legal rights, and you may also have other rights which vary from state to state.

For the address of your nearest authorized service center, contact Marley Engineered Products in Bennettsville, SC, at 1-800-642-4328. Merchandise returned to the factory must be accompanied by a return authorization and service identification tag, both available from Marley Engineered Products. When requesting return authorization, include all catalog numbers shown on the products.

HOW TO OBTAIN WARRANTY SERVICE AND WARRANTY PARTS PLUS GENERAL INFORMATION

1. Warranty Service or Parts **1-800-642-4328**
2. Purchase Replacement Parts **1-800-654-3545**
3. General Product Information **www.marleymep.com**

Note: When obtaining service always have the following:
1. Model number of the product
2. Date of manufacture
3. Part number or description

Marley Engineered Products
470 Beauty Spot Rd. East
Bennettsville, SC 29512 USA