BERKO®

Heat Trace

PRODUCT CATALOG

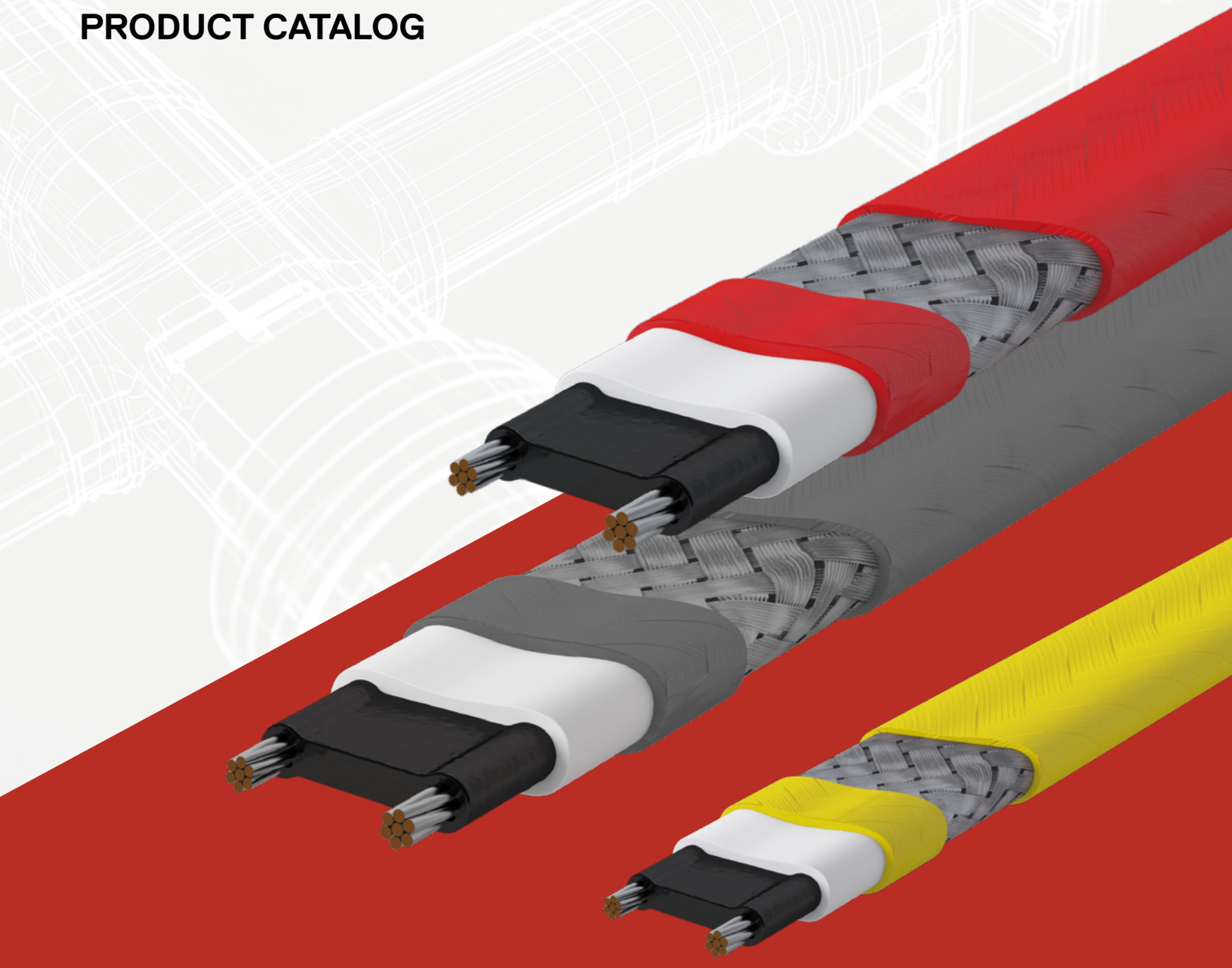

Reliable, efficient and built for protection

TABLE OF CONTENTS

01 HEAT TRACE DESIGN GUIDE 03

PRODUCT GUIDE 04

INSTALLATION 05

02 HEATING CABLES 06

CRGX 07

LSRX 10

MSRX 12

HSRX 14

MINERAL INSULATED 16

03 CONNECTION KITS 18

POWER CONNECTIONS 19

SPLICE OR TEE KIT 20

END SEALS 21

LIGHTED END SEALS 22

04 ADDITIONAL PRODUCTS 24

THERMOSTATS & CONTROLLERS 25

ACCESSORIES 26

05 DATA FORMS 27

DESIGN GUIDE FORM 28

INSTALLATION & MAINTENANCE FORM 29

01

HEAT TRACE DESIGN GUIDE

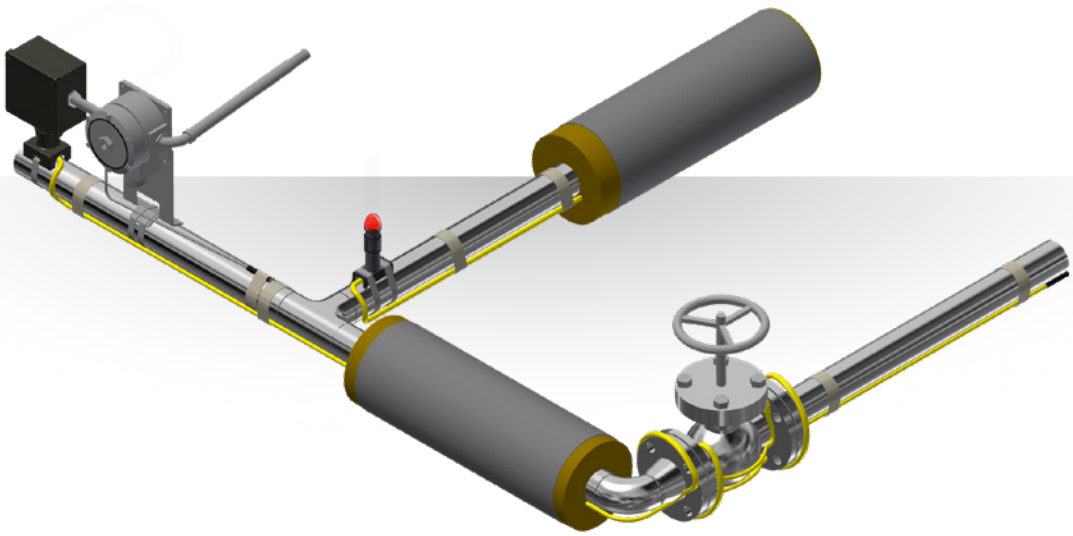

HEATING CABLE GUIDE

Berko offers a comprehensive line of heat trace products engineered to meet the most demanding requirements for freeze protection, temperature maintenance, snow melting, de-icing, and specialty applications across industrial and commercial markets. Designed and manufactured to the highest industry standards, these products are third-party approved for use in hazardous industrial environments, delivering reliable performance and long-term durability you can trust.
Cables are available now!



CRGX

Heating cables designed for freeze protection of metal and plastic pipes as well as roof & gutter de-icing applications.

- **Temperature rating:** 150°F maintain / 185°F exposure
- **Voltage:** 120–277V
- **Power output:** 3, 5, 8, or 10 W/ft
- **Approvals:** FM (US & Canada), UL, cULus



LRSX

Heating cables designed for freeze protection and temperature maintenance of metal and plastic pipes.

- **Temperature rating:** 150°F maintain / 185°F exposure
- **Voltage:** 120–277V
- **Power output:** 3, 5, 8, or 10 W/ft
- **Approvals:** FM (US & Canada), UL, cULus



MSRX

Heating cables designed for freeze protection and temperature maintenance of metal pipes and tanks.

- **Temperature rating:** 250°F maintain / 392°F exposure
- **Voltage:** 120–277V
- **Power output:** 5, 10, 15, or 20 W/ft
- **Approvals:** FM (US & Canada), UL, cULus



HSRX

Heating cables designed for freeze protection and temperature maintenance of metal pipes and tanks.

- **Temperature rating:** 300°F maintain / 482°F exposure
- **Voltage:** 120–277V
- **Power output:** 5, 10, 15, or 20 W/ft
- **Approvals:** FM (US & Canada), UL, cULus



Mineral Insulated

Heating cables and accessories designed for high-temperature heat tracing applications.

- **Temperature rating:** 1100°F maintain / 1400°F exposure
- **Voltage:** 120–600V
- **Power output:** Up to 70 W/ft

INSTALLATION OVERVIEW

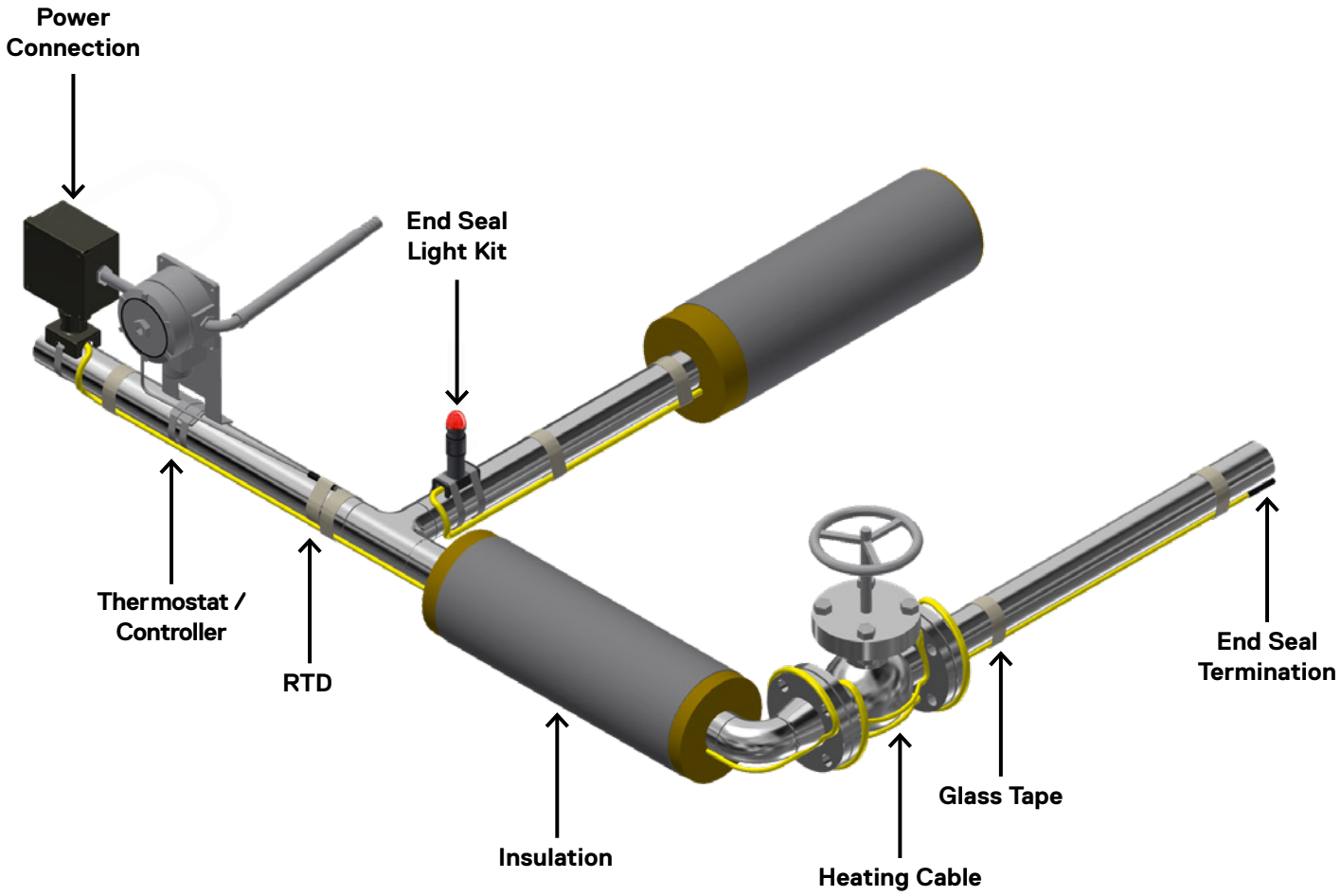

Kits



Power Connections
MEP-HT-IPC-1 (1 cable)
MEP-HT-IMC-3 (3 cables)



Splice Or Tee Kit
MEP-HT-IST-1



End Seals
MEP-HT-IES-1



Lighted End Seals
MEP-HT-IESL-R (Red)
MEP-HT-IESL-G (Green)

02

HEATING CABLES

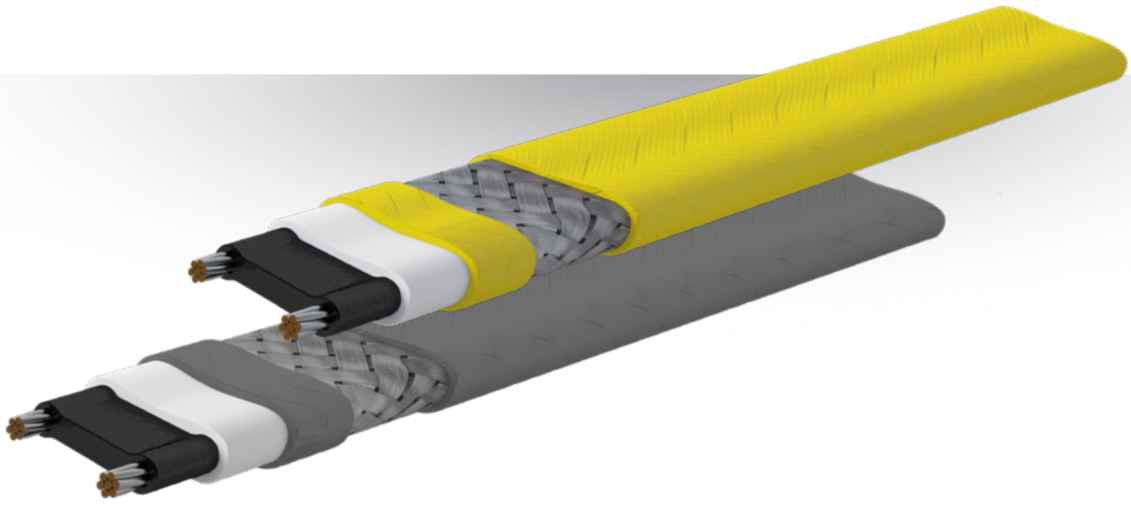

CRGX

SELF-REGULATING HEATING CABLE

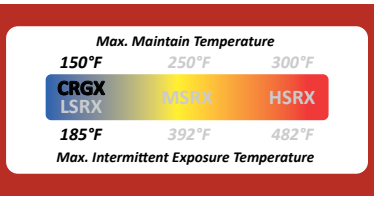

Product Description

The CRGX Self-Regulating Heating Cable is designed for freeze protection and process temperature maintenance of metal and non-metal pipes, vessels, and equipment.

The unique PTC feature of CRGX self-regulating core elements adjusts its heat output in response to the surrounding temperature along the entire circuit, delivering more heat where and when required. This self-regulating feature also serves to prevent overheating, even in cases where CRGX cables overlap. Another benefit of the cable is the ability to cut to length in the field, completed with Marley Engineered Products system connection kits for quick and convenient installations.

CRGX heating cable system is certified for ordinary areas with maximum maintain temperature of 150°F (65°C) and intermittent exposure temperature of 185°F (85°C). Use of Marley Engineered Products connection kits for CRGX installation is required to comply with system approval, ensuring safe operation and reliable thermal performance.

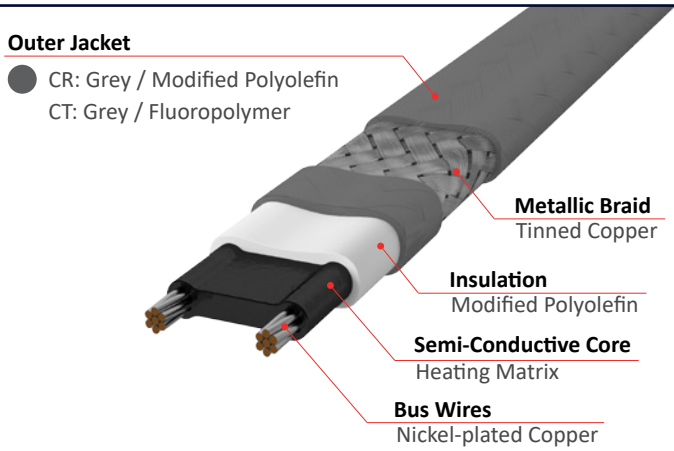

Specification

Max. Intermittent Exposure Temp.	185°F (85°C)
Max. Maintain or Continuous Exposure Temp.	150°F (65°C)
Supply Voltage	120V or 208-277V
Output Wattage	3, 5, 8, 10, 12* W/ft @50°F (10, 16, 26, 33, 39W/m @10°C) (* 12W/ft only available in Supply Voltage 200 – 277V)
Bus wire	16 AWG
Min. Bending Radius	0.5" @68°F (13mm @20°C), 1.6" @-58°F (40mm @-50°C)
Min. Installation Temperature	-58°F (-50°C)
Min. Start-up Temperature	-40°F (-40°C)
Max. Circuit Breaker Size	40A
Outer Jacket Color	Grey
Heating Cable Dimensions (Nominal)	CR : 0.49" x 0.25" (12.5mm x 6.0mm), CT : 0.46" x 0.21" (11.8mm x 5.0mm)
Heating Cable Weight	CR : 0.0741lb/ft(0.110kg/m), CT : 0.0695lb/ft(0.103kg/m)

Ordering Information

BK-CRGX*a-bc*

BK-CRGX =	Model Name
a =	Output Wattage: 03, 05, 08, 10, 12* W/ft
b =	Voltage: 1 = 120V , 2 = 208-277V
c =	Outer Jacket: CR = Polyolefin, CT = Fluoropolymer

*12W/ft(39W/m) only available for 208 – 277V

Connection Kits

Marley Engineered Products offers system components for power connections, splice or tee connections and end terminations to ensure proper functioning of the products and comply with warranty and approvals requirements.

For easier installation and safe operation, use of substituted parts are not recommended. Please contact Marley Engineered Products for more information on system components.

Certification / Approvals

FM26US0013X, FM26CA0003X
Hazardous (classified) locations, indoors and outdoors
Class I, Division 2, Groups A, B, C, and D T6
Class II/III, Division 2, Groups F and G T6
Class I, Zone 1, AEx/Ex 60079-30-1 IIC T6 Gb
Zone 21, AEx/Ex 60079-30-1 IIIC T85°C Db
Type 4X, IP66

E515828 : Industrial and Commercial Pipe-Heating Cable†
E515829 : De-icing and Snow-Melting Equipment†
E552707 : Residential Pipe-Heating Cable†

Approval is valid only if the cable is installed with certified connection kits as a system.
†UL certification excludes 12 W/ft cables as well as fluoropolymer outer jacket cables.

Nominal Power Output Ratings on Insulated Metal Pipes at 120/240 V

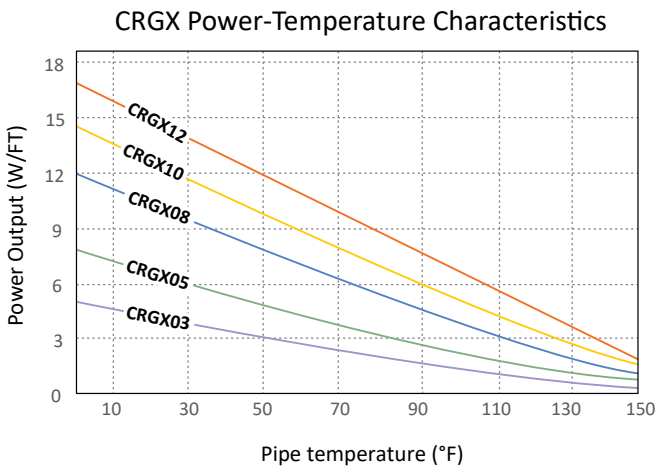

Circuit length adjustment factor

Voltage	CRGX03	CRGX05	CRGX08	CRGX10	CRGX12
208V	0.969	0.957	0.925	0.920	0.915
240V	1.000	1.000	1.000	1.000	1.000
277V	1.054	1.065	1.088	1.120	1.130

Power adjustment factor

Voltage	CRGX03	CRGX05	CRGX08	CRGX10	CRGX12
208V	0.800	0.820	0.880	0.910	0.943
240V	1.000	1.000	1.000	1.000	1.000
277V	1.190	1.170	1.120	1.100	1.071

[Note]
The power output will be derated by 25% on plastic pipes. HTAT-1 aluminum tape is required for installation on plastic pipes.

Max. Circuit Length based on Circuit Breaker Selection

Catalog Number	Start-Up Temperature °F (°C)	Maximum Circuit Length per Circuit Breaker, feet (meters)							
		120V				240V			
		15A	20A	30A	40A	15A	20A	30A	40A
CRGX03	50 (10)	327 (99)	377 (115)	377 (115)	377 (115)	654 (199)	732 (223)	732 (223)	732 (223)
	32 (0)	262 (80)	350 (106)	377 (115)	377 (115)	525 (160)	700 (213)	732 (223)	732 (223)
	0 (-18)	200 (60)	266 (81)	377 (115)	377 (115)	400 (121)	533 (162)	732 (223)	732 (223)
	-20 (-29)	173 (52)	231 (70)	346 (105)	377 (115)	346 (105)	461 (140)	692 (210)	732 (223)
	-40 (-40)	152 (46)	203 (61)	305 (92)	377 (115)	305 (92)	406 (123)	610 (185)	732 (223)
CRGX05	50 (10)	200 (60)	267 (81)	302 (92)	302 (92)	400 (121)	533 (162)	604 (184)	604 (184)
	32 (0)	166 (50)	222 (67)	302 (92)	302 (92)	333 (101)	444 (135)	604 (184)	604 (184)
	0 (-18)	126 (38)	168 (51)	252 (76)	302 (92)	252 (76)	336 (102)	504 (153)	604 (184)
	-20 (-29)	110 (33)	146 (44)	220 (66)	293 (89)	220 (66)	293 (89)	439 (133)	586 (178)
	-40 (-40)	97 (29)	130 (39)	195 (59)	259 (79)	195 (59)	259 (79)	389 (118)	519 (158)
CRGX08	50 (10)	154 (46)	205 (62)	243 (74)	243 (74)	307 (93)	409 (124)	482 (147)	482 (147)
	32 (0)	131 (40)	175 (53)	243 (74)	243 (74)	262 (80)	350 (106)	482 (147)	482 (147)
	0 (-18)	104 (31)	138 (42)	207 (63)	243 (74)	207 (63)	276 (84)	415 (126)	482 (147)
	-20 (-29)	92 (27)	122 (37)	184 (55)	243 (74)	184 (55)	245 (74)	367 (111)	482 (147)
	-40 (-40)	82 (25)	110 (33)	165 (50)	219 (66)	165 (50)	219 (66)	329 (100)	439 (133)
CRGX10	50 (10)	125 (38)	167 (50)	207 (63)	207 (63)	250 (76)	334 (101)	410 (125)	410 (125)
	32 (0)	110 (33)	146 (44)	207 (63)	207 (63)	220 (66)	293 (89)	410 (125)	410 (125)
	0 (-18)	90 (27)	120 (36)	179 (54)	207 (63)	179 (54)	239 (72)	359 (109)	410 (125)
	-20 (-29)	81 (24)	107 (32)	161 (49)	207 (63)	161 (49)	215 (65)	322 (98)	410 (125)
	-40 (-40)	73 (22)	97 (29)	146 (44)	195 (59)	146 (44)	195 (59)	292 (89)	390 (118)
CRGX12	50 (10)					222 (67)	295 (89)	322 (98)	322 (98)
	0 (-18)					156 (47)	209 (63)	313 (95)	322 (98)
	-20 (-29)					140 (42)	187 (56)	280 (85)	322 (98)
	-40 (-40)					127 (38)	169 (51)	253 (77)	322 (98)

[Note]
1. The circuit lengths are based on trip current characteristics of Type QO and Type QCB devices. For devices with different trip characteristics please consult Marley Engineered Products.
2. Use local electrical codes to select appropriate branch circuit breakers.
3. The total length of heating cables connected to the circuit breaker is the sum of all cables that have been spliced or interconnected in parallel. Ensure that the total length does not exceed the maximum circuit length as indicated above.
4. Ground fault protection of equipment is required for heat tracing branch circuits with typical trip level of 30mA. Thermal magnetic breakers are recommended to reduce nuisance tripping.
5. It is recommended to start up the circuits at higher temperatures, when possible, to avoid large start-up or in-rush current which may trip the circuit breaker.
6. Standard 50-foot minimum length for all heat trace cables.

Self-Regulating Heating Cable for Roof & Gutter Deicing

Product Description

CRGX is also designed for roof and gutter de-icing applications in ordinary locations. Cut-to length spools with system components allow easy and safe installation on site. Pre-assembled products are also available upon request. Factory-assembled with power splice and end seal, plug-in power cord allows instant operation.

Nominal Power Output Ratings on Roof and Gutter Applications

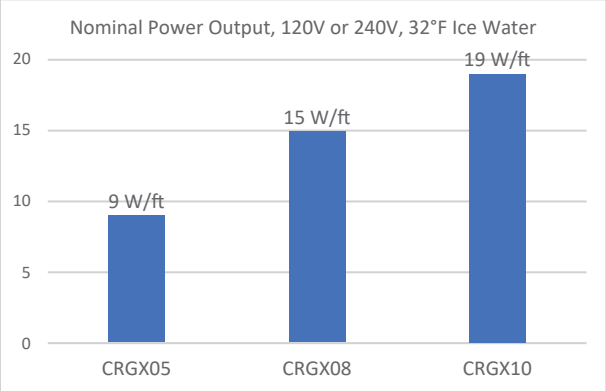

Circuit length adjustment factor

Voltage	CRGX05	CRGX08	CRGX10
208V	0.944	0.922	0.920
240V	1.000	1.000	1.000
277V	1.064	1.097	1.098

Power adjustment factor

Voltage	CRGX05	CRGX08	CRGX10
208V	0.820	0.880	0.910
240V	1.000	1.000	1.000
277V	1.170	1.120	1.100

Max. Circuit Length based on Circuit Breaker Selection

Catalog Number	Start-Up Temperature °F (°C)	Maximum Circuit Length per Circuit Breaker, feet (meters)							
		120V				240V			
		15A	20A	30A	40A	15A	20A	30A	40A
CRGX05	32 (0) ice	100 (30)	133 (40)	200 (60)	213 (64)	200 (60)	266 (81)	400 (121)	410 (124)
	0 (-18) ice	76 (23)	101 (30)	152 (46)	203 (61)	152 (46)	203 (61)	304 (92)	410 (124)
CRGX08	32 (0) ice	73 (22)	96 (29)	146 (44)	167 (50)	200 (60)	266 (81)	400 (121)	410 (124)
	0 (-18) ice	53 (16)	70 (21)	104 (31)	140 (42)	152 (46)	203 (61)	304 (92)	410 (124)
CRGX10	32 (0) ice	62 (18)	83 (25)	125 (38)	150 (45)	125 (38)	166 (50)	250 (76)	301 (91)
	0 (-18) ice	50 (15)	67 (20)	101 (30)	134 (40)	101 (30)	135 (41)	202 (61)	269 (81)

Technical information subject to change without notification.

LSRX

SELF-REGULATING HEATING CABLE

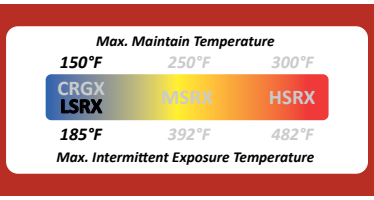

Product Description

The LSRX Self-Regulating Heating Cable is designed for freeze protection and process temperature maintenance of metal and non-metal pipes, vessels, and equipment.

The unique PTC feature of LSRX self-regulating core elements adjusts its heat output in response to the surrounding temperature along the entire circuit, delivering more heat where and when required. This self-regulating feature also serves to prevent overheating, even in cases where LSRX cables overlap. Another benefit of the cable is the ability to cut to length in the field, completed with Marley Engineered Products system connection kits for quick and convenient installations.

LSRX heating cable system is certified for ordinary and hazardous areas with maximum maintain temperature of 150°F (65°C) and intermittent exposure temperature of 185°F (85°C). Use of Marley Engineered Products connection kits for LSRX installation is required to comply with system approval, ensuring safe operation and reliable thermal performance.

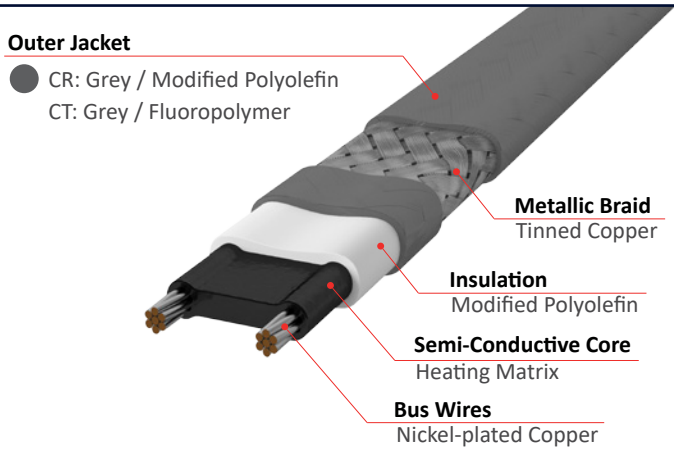

Specification

Max. Intermittent Exposure Temp.	185°F (85°C)
Max. Maintain or Continuous Exposure Temp.	150°F (65°C)
Supply Voltage	120V or 208-277V
Output Wattage	3, 5, 8, 10, 12* W/ft @50°F (10, 16, 26, 33, 39W/m @10°C) (* 12W/ft only available in Supply Voltage 208 – 277V)
Bus wire	16 AWG
Min. Bending Radius	0.5" @68°F (13mm @20°C), 1.6" @-58°F (40mm @-50°C)
Min. Installation Temperature	-58°F (-50°C)
Min. Start-up Temperature	-40°F (-40°C)
Max. Circuit Breaker Size	40A
Outer Jacket Color	Grey
Heating Cable Dimensions (Nominal)	CR : 0.49" x 0.25" (12.5mm x 6.0mm), CT : 0.46" x 0.21" (11.8mm x 5.0mm)
Heating Cable Weight	CR : 0.0741lb/ft(0.110kg/m), CT : 0.0695lb/ft(0.103kg/m)

Ordering Information

BK-LSRX*a-bc*

BK-LSRX = Model Name
a = Output Wattage: 03, 05, 08, 10, 12* W/ft at 50 deg F
b = Voltage: 1 = 120V , 2 = 208-277V
c = Outer Jacket: CR = Polyolefin, CT = Fluoropolymer

*12W/ft(39W/m) only available for 208 – 277V

Connection Kits

Marley Engineered Products offers system components for power connections, splice or tee connections and end terminations to ensure proper functioning of the products and comply with warranty and approvals requirements.

For easier installation and safe operation, use of substituted parts are not recommended. Please contact Marley Engineered Products for more information on system components.

Certification / Approvals

FM26US0013X, FM26CA0003X
Hazardous (classified) locations, indoors and outdoors
Class I, Division 2, Groups A, B, C, and D T6
Class II/III, Division 2, Groups F and G T6
Class I, Zone 1, AEx/Ex 60079-30-1 IIC T6 Gb
Zone 21, AEx/Ex 60079-30-1 IIIC T6 °C Db
Type 4X, IP66

E515828 : Industrial and Commercial Pipe-Heating Cable†
E515829 : De-icing and Snow-Melting Equipment†
E552707 : Residential Pipe-Heating Cable†

Approval is valid only if the cable is installed with certified connection kits as a system.
†UL certification excludes 12 W/ft cables as well as fluoropolymer outer jacket cables.

Nominal Power Output Ratings on Insulated Metal Pipes at 120/240 V

LSRX Power-Temperature Characteristics

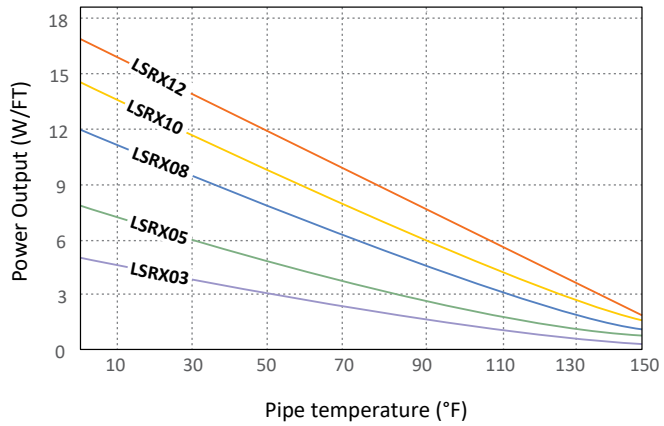

Circuit length adjustment factor

Voltage	LSRX03	LSRX05	LSRX08	LSRX10	LSRX12
208V	0.969	0.957	0.925	0.920	0.915
240V	1.000	1.000	1.000	1.000	1.000
277V	1.054	1.065	1.088	1.120	1.130

Power adjustment factor

Voltage	LSRX03	LSRX05	LSRX08	LSRX10	LSRX12
208V	0.800	0.820	0.880	0.910	0.943
240V	1.000	1.000	1.000	1.000	1.000
277V	1.190	1.170	1.120	1.100	1.071

[Note]
The power output will be derated by 25% on plastic pipes. HTAT-1 aluminum tape is required for installation on plastic pipes.

Max. Circuit Length based on Circuit Breaker Selection

Catalog Number	Start-Up Temperature °F (°C)	Maximum Circuit Length per Circuit Breaker, feet (meters)							
		120V				240V			
		15A	20A	30A	40A	15A	20A	30A	40A
LSRX03	50 (10)	327 (99)	377 (115)	377 (115)	377 (115)	654 (199)	732 (223)	732 (223)	732 (223)
	32 (0)	262 (80)	350 (106)	377 (115)	377 (115)	525 (160)	700 (213)	732 (223)	732 (223)
	0 (-18)	200 (60)	266 (81)	377 (115)	377 (115)	400 (121)	533 (162)	732 (223)	732 (223)
	-20 (-29)	173 (52)	231 (70)	346 (105)	377 (115)	346 (105)	461 (140)	692 (210)	732 (223)
	-40 (-40)	152 (46)	203 (61)	305 (92)	377 (115)	305 (92)	406 (123)	610 (185)	732 (223)
LSRX05	50 (10)	200 (60)	267 (81)	302 (92)	302 (92)	400 (121)	533 (162)	604 (184)	604 (184)
	32 (0)	166 (50)	222 (67)	302 (92)	302 (92)	333 (101)	444 (135)	604 (184)	604 (184)
	0 (-18)	126 (38)	168 (51)	252 (76)	302 (92)	252 (76)	336 (102)	504 (153)	604 (184)
	-20 (-29)	110 (33)	146 (44)	220 (66)	293 (89)	220 (66)	293 (89)	439 (133)	586 (178)
	-40 (-40)	97 (29)	130 (39)	195 (59)	259 (79)	195 (59)	259 (79)	389 (118)	519 (158)
LSRX08	50 (10)	154 (46)	205 (62)	243 (74)	243 (74)	307 (93)	409 (124)	482 (147)	482 (147)
	32 (0)	131 (40)	175 (53)	243 (74)	243 (74)	262 (80)	350 (106)	482 (147)	482 (147)
	0 (-18)	104 (31)	138 (42)	207 (63)	243 (74)	207 (63)	276 (84)	415 (126)	482 (147)
	-20 (-29)	92 (27)	122 (37)	184 (55)	243 (74)	184 (55)	245 (74)	367 (111)	482 (147)
	-40 (-40)	82 (25)	110 (33)	165 (50)	219 (66)	165 (50)	219 (66)	329 (100)	439 (133)
LSRX10	50 (10)	125 (38)	167 (50)	207 (63)	207 (63)	250 (76)	334 (101)	410 (125)	410 (125)
	32 (0)	110 (33)	146 (44)	207 (63)	207 (63)	220 (66)	293 (89)	410 (125)	410 (125)
	0 (-18)	90 (27)	120 (36)	179 (54)	207 (63)	179 (54)	239 (72)	359 (109)	410 (125)
	-20 (-29)	81 (24)	107 (32)	161 (49)	207 (63)	161 (49)	215 (65)	322 (98)	410 (125)
	-40 (-40)	73 (22)	97 (29)	146 (44)	195 (59)	146 (44)	195 (59)	292 (89)	390 (118)
LSRX12	50 (10)					222 (67)	295 (89)	322 (98)	322 (98)
	0 (-18)					156 (47)	209 (63)	313 (95)	322 (98)
	-20 (-29)					140 (42)	187 (56)	280 (85)	322 (98)
	-40 (-40)					127 (38)	169 (51)	253 (77)	322 (98)

[Note]
1. The circuit lengths are based on trip current characteristics of Type QO and Type QCB devices. For devices with different trip characteristics please consult Marley Engineered Products.
2. Use local electrical codes to select appropriate branch circuit breakers.
3. The total length of heating cables connected to the circuit breaker is the sum of all cables that have been spliced or interconnected in parallel. Ensure that the total length does not exceed the maximum circuit length as indicated above.
4. Ground fault protection of equipment is required for heat tracing branch circuits with typical trip level of 30mA. Thermal magnetic breakers are recommended to reduce nuisance tripping.
5. It is recommended to start up the circuits at higher temperatures, when possible, to avoid large start-up or in-rush current which may trip the circuit breaker.
6. Standard 50-foot minimum length for all heat trace cables.

Technical information subject to change without notification.

MSRX

SELF-REGULATING HEATING CABLE

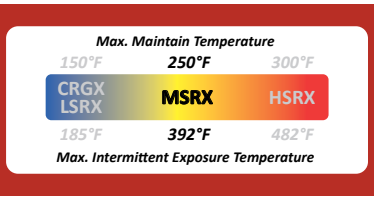

Product Description

The MSRX Self-Regulating Heating Cable is designed for freeze protection and process temperature maintenance of metal and non-metal pipes, vessels, and equipment.

The unique PTC feature of MSRX self-regulating core elements adjusts its heat output in response to the surrounding temperature along the entire circuit, delivering more heat where and when required. This self-regulating feature also serves to prevent overheating, even in cases where MSRX cables overlap. Another benefit of the cable is the ability to cut to length in the field, completed with Marley Engineered Products system connection kits for quick and convenient installations.

MSRX heating cable system is certified for ordinary and hazardous areas with maximum maintain temperature of 250°F (120°C) and intermittent exposure temperature of 392°F (200°C). Use of Marley Engineered Products connection kits for MSRX installation is required to comply with system approval, ensuring safe operation and reliable thermal performance.

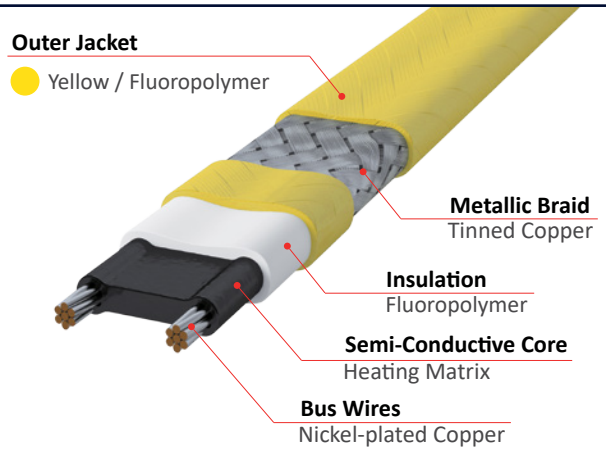

Specification

Max. Intermittent Exposure Temp.	392°F (200°C)
Max. Maintain or Continuous Exposure Temp.	250°F (120°C)
Supply Voltage	120V or 208 – 277V
Output Wattage	5, 10, 15, 20W/ft @50°F (16, 33, 49, 66W/m @10°C)
Bus wire	16 AWG
Min. Bending Radius	0.8" @70°F (20mm @20°C), 1.8" @-76°F (45mm @-60°C)
Min. Installation Temperature	-76°F (-60°C)
Min. Start-up Temperature	-40°F (-40°C)
Max. Circuit Breaker Size	50A
Outer Jacket Color	Yellow
Heating Cable Dimensions (Nominal)	0.43" x 0.20" (11.0mm x 5.0mm)
Heating Cable Weight	0.0753lb/ft (0.112kg/m)

Ordering Information

BK-MSRX*a*-*b*CT

BK-MSRX =	Model Name
a =	Output Wattage: 05, 10, 15, 20 W/ft at 50 deg F
b =	Voltage: 1 = 120V , 2 = 208-277V
CT =	Outer Jacket: Fluoropolymer

Connection Kits

Marley Engineered Products offers system components for power connections, splice or tee connections and end terminations to ensure proper functioning of the products and comply with warranty and approvals requirements.

For easier installation and safe operation, use of substituted parts are not recommended. Please contact Marley Engineered Products for more information on system components.

Certification / Approvals

FM C US APPROVED

FM26US0013X, FM26CA0003X
Hazardous (classified) locations, indoors and outdoors
Class I, Division 2, Groups A, B, C, and D T3
Class II/III, Division 2, Groups F and G T3
Class I, Zone 1, AEx/Ex 60079-30-1 IIC T3 Gb
Zone 21, AEx/Ex 60079-30-1 IIIC T200°C Db
Type 4X, IP66

Nominal Power Output Ratings on Insulated Metal Pipes at 120/240 V

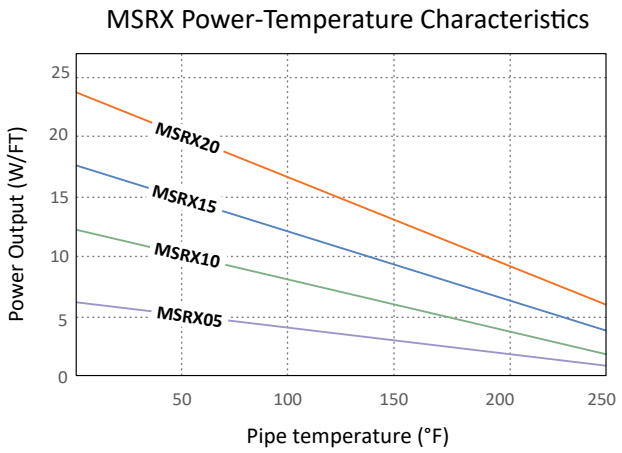

Circuit length adjustment factor

Voltage	MSRX05	MSRX10	MSRX15	MSRX20
208V	0.94	0.94	0.93	0.94
240V	1.00	1.00	1.00	1.00
277V	1.09	1.09	1.11	1.11

Power adjustment factor

Voltage	MSRX05	MSRX10	MSRX15	MSRX20
208V	0.88	0.89	0.90	0.91
240V	1.00	1.00	1.00	1.00
277V	1.06	1.07	1.07	1.06

[Note]
The power output will be derated by 25% on plastic pipes. HTAT-1 aluminum tape is required for installation on plastic pipes.

Max. Circuit Length based on Circuit Breaker Selection

Catalog Number	Start-Up Temperature °F (°C)	Maximum Circuit Length per Circuit Breaker, feet (meters)									
		120V					240V				
		15A	20A	30A	40A	50A	15A	20A	30A	40A	50A
MSRX05	50 (10)	180 (54)	240 (73)	358 (109)	358 (109)	358 (109)	360 (109)	480 (146)	709 (216)	709 (216)	709 (216)
	0 (-18)	141 (42)	187 (57)	281 (85)	358 (109)	358 (109)	281 (85)	375 (114)	562 (171)	709 (216)	709 (216)
	-20 (-29)	129 (39)	172 (52)	258 (78)	345 (105)	358 (109)	258 (78)	345 (105)	517 (157)	689 (210)	709 (216)
	-40 (-40)	120 (36)	159 (48)	239 (72)	319 (97)	358 (109)	239 (72)	319 (97)	478 (145)	638 (194)	709 (216)
MSRX10	50 (10)	107 (32)	142 (43)	213 (65)	253 (77)	253 (77)	213 (65)	284 (86)	427 (130)	502 (153)	502 (153)
	0 (-18)	87 (26)	116 (35)	174 (53)	232 (70)	253 (77)	174 (53)	232 (70)	348 (106)	464 (141)	502 (153)
	-20 (-29)	81 (24)	108 (32)	162 (49)	216 (65)	253 (77)	162 (49)	216 (65)	324 (98)	432 (131)	502 (153)
	-40 (-40)	76 (23)	101 (30)	152 (46)	202 (61)	253 (76)	152 (46)	202 (61)	303 (92)	404 (123)	502 (153)
MSRX15	50 (10)	78 (23)	104 (31)	156 (47)	203 (62)	203 (62)	156 (47)	208 (63)	312 (95)	400 (122)	400 (122)
	0 (-18)	65 (19)	87 (26)	130 (39)	174 (52)	203 (62)	130 (39)	174 (52)	261 (79)	347 (105)	400 (122)
	-20 (-29)	61 (18)	82 (24)	122 (37)	163 (49)	203 (62)	122 (37)	163 (49)	245 (74)	326 (99)	400 (122)
	-40 (-40)	58 (17)	77 (23)	115 (35)	154 (46)	192 (58)	115 (35)	154 (46)	230 (70)	307 (93)	384 (117)
MSRX20	50 (10)	58 (17)	78 (23)	117 (35)	155 (47)	174 (53)	117 (35)	155 (47)	233 (71)	311 (94)	348 (106)
	0 (-18)	50 (15)	67 (20)	100 (30)	134 (40)	167 (50)	100 (30)	134 (40)	200 (61)	267 (81)	334 (101)
	-20 (-29)	47 (14)	63 (19)	95 (28)	126 (38)	158 (48)	95 (28)	126 (38)	190 (57)	253 (77)	316 (96)
	-40 (-40)	45 (13)	60 (18)	90 (27)	120 (36)	150 (45)	90 (27)	120 (36)	180 (54)	240 (73)	300 (91)

[Note]
1. The circuit lengths are based on trip current characteristics of Type QO and Type QCB devices. For devices with different trip characteristics please consult Marley Engineered Products.
2. Use local electrical codes to select appropriate branch circuit breakers.
3. The total length of heating cables connected to the circuit breaker is the sum of all cables that have been spliced or interconnected in parallel. Ensure that the total length does not exceed the maximum circuit length as indicated above.
4. Ground fault protection of equipment is required for heat tracing branch circuits with typical trip level of 30mA. Thermal magnetic breakers are recommended to reduce nuisance tripping.
5. It is recommended to start up the circuits at higher temperatures, when possible, to avoid large start-up or in-rush current which may trip the circuit breaker.
6. Standard 50-foot minimum length for all heat trace cables.

Technical information subject to change without notification.

HSRX

SELF-REGULATING HEATING CABLE

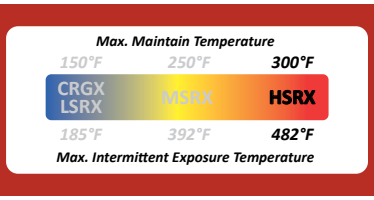

Product Description

The HSRX Self-Regulating Heating Cable is designed for freeze protection and high process temperature maintenance of metal and non-metal pipes, vessels, and equipment where steam cleaning is required.

The unique PTC feature of HSRX self-regulating core elements adjusts its heat output in response to the surrounding temperature along the entire circuit, delivering more heat where and when required. This self-regulating feature also serves to prevent overheating, even in cases where HSRX cables overlap. Another benefit of the cable is the ability to cut to length in the field, completed with Marley Engineered Products system connection kits for quick and convenient installations.

HSRX heating cable system is certified for ordinary and hazardous areas with maximum maintain temperature of 300°F(150°C) and intermittent exposure temperature of 482°F(250°C). Use of Marley Engineered Products connection kits for HSRX installation is required to comply with system approval, ensuring safe operation and reliable thermal performance.

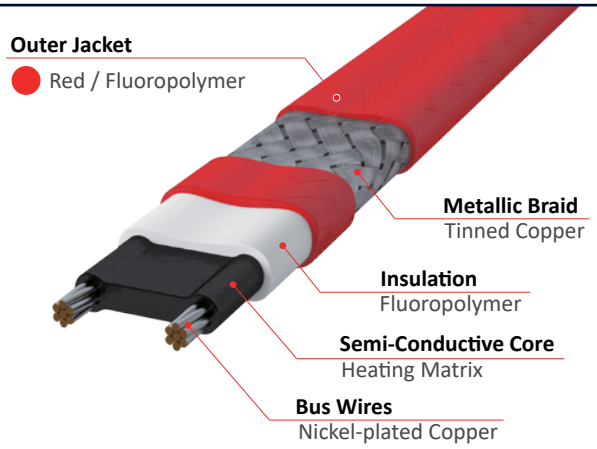

Specification

Max. Intermittent Exposure Temp.	482°F (250°C)
Max. Maintain or Continuous Exposure Temp.	300°F (150°C)
Supply Voltage	120V or 208-277V
Output Wattage	5, 10, 15, 20W/ft @50°F (16, 33, 49, 66W/m @10°C)
Bus wire	16 AWG
Min. Bending Radius	0.8" @70°F (20mm @20°C), 1.8" @-76°F (45mm @-60°C)
Min. Installation Temperature	-76°F (-60°C)
Min. Start-up Temperature	-40°F (-40°C)
Max. Circuit Breaker Size	50A
Outer Jacket Color	Red
Heating Cable Dimensions (Nominal)	0.50" x 0.20" (13.0mm x 5.0mm)
Heating Cable Weight	0.0902lb/ft (0.134kg/m)

Ordering Information

BK-HSRX*a*-*b*CT

BK-HSRX =	Model Name
a =	Output Wattage: 05, 10, 15, 20 W/ft
b =	Voltage: 1 = 120V , 2 = 208-277V
CT =	Outer Jacket: Fluoropolymer

Connection Kits

Marley Engineered Products offers system components for power connections, splice or tee connections and end terminations to ensure proper functioning of the products and comply with warranty and approvals requirements.

For easier installation and safe operation, use of substituted parts are not recommended. Please contact Marley Engineered Products for more information on system components.

Certification / Approvals

FM26US0013X, FM26CA0003X
Hazardous (classified) locations, indoors and outdoors
Class I, Division 2, Groups A, B, C, and D T3A or T2D (at 20W/ft)
Class II/III, Division 2, Groups F and G T3A or T2D (at 20W/ft)
Class I, Zone 1, AEx/Ex 60079-30-1 IIC T3A or T2D (at 20W/ft) Gb
Zone 21, AEx/Ex 60079-30-1 IIIC T180°C or T215°C (at 20W/ft) Db
Type 4X, IP66

Nominal Power Output Ratings on Insulated Metal Pipes at 120/240

HSRX Power-Temperature Characteristics

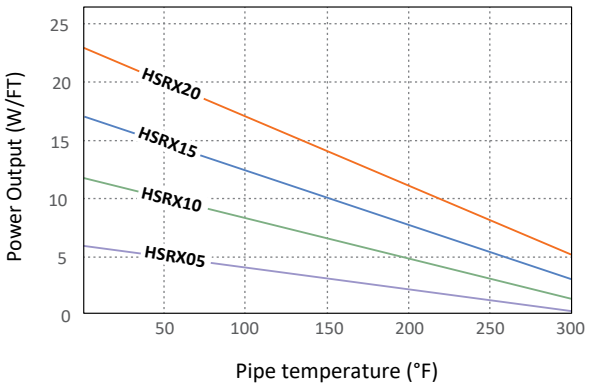

Circuit length adjustment factor

Voltage	HSRX05	HSRX10	HSRX15	HSRX20
208V	0.93	0.94	0.94	0.94
240V	1.00	1.00	1.00	1.00
277V	1.10	1.10	1.11	1.11

Power adjustment factor

Voltage	HSRX05	HSRX10	HSRX15	HSRX20
208V	0.93	0.94	0.94	0.94
240V	1.00	1.00	1.00	1.00
277V	1.10	1.10	1.11	1.11

[Note]
The power output will be derated by 25% on plastic pipes. HTAT-1 aluminum tape is required for installation on plastic pipes.

Max. Circuit Length based on Circuit Breaker Selection

Catalog Number	Start-Up Temperature °F (°C)	Maximum Circuit Length per Circuit Breaker, feet (meters)									
		120V					240V				
		15A	20A	30A	40A	50A	15A	20A	30A	40A	50A
HSRX05	50 (10)	180 (54)	240 (73)	358 (109)	358 (109)	358 (109)	360 (109)	480 (146)	709 (216)	709 (216)	709 (216)
	0 (-18)	141 (42)	187 (57)	281 (85)	358 (109)	358 (109)	281 (85)	375 (114)	562 (171)	709 (216)	709 (216)
	-20 (-29)	129 (39)	172 (52)	258 (78)	345 (105)	358 (109)	258 (78)	345 (105)	517 (157)	689 (210)	709 (216)
	-40 (-40)	120 (36)	159 (48)	239 (72)	319 (97)	358 (109)	239 (72)	319 (97)	478 (145)	638 (194)	709 (216)
HSRX10	50 (10)	107 (32)	142 (43)	213 (65)	253 (77)	253 (77)	213 (65)	284 (86)	427 (130)	502 (153)	502 (153)
	0 (-18)	87 (26)	116 (35)	174 (53)	232 (70)	253 (77)	174 (53)	232 (70)	348 (106)	464 (141)	502 (153)
	-20 (-29)	81 (24)	108 (32)	162 (49)	216 (65)	253 (77)	162 (49)	216 (65)	324 (98)	432 (131)	502 (153)
	-40 (-40)	76 (23)	101 (30)	152 (46)	202 (61)	253 (76)	152 (46)	202 (61)	303 (92)	404 (123)	502 (153)
HSRX15	50 (10)	78 (23)	104 (31)	156 (47)	203 (62)	203 (62)	156 (47)	208 (63)	312 (95)	400 (122)	400 (122)
	0 (-18)	65 (19)	87 (26)	130 (39)	174 (52)	203 (62)	130 (39)	174 (52)	261 (79)	347 (105)	400 (122)
	-20 (-29)	61 (18)	82 (24)	122 (37)	163 (49)	203 (62)	122 (37)	163 (49)	245 (74)	326 (99)	400 (122)
	-40 (-40)	58 (17)	77 (23)	115 (35)	154 (46)	192 (58)	115 (35)	154 (46)	230 (70)	307 (93)	384 (117)
HSRX20	50 (10)	58 (17)	78 (23)	117 (35)	155 (47)	174 (53)	117 (35)	155 (47)	233 (71)	311 (94)	348 (106)
	0 (-18)	50 (15)	67 (20)	100 (30)	134 (40)	167 (50)	100 (30)	134 (40)	200 (61)	267 (81)	334 (101)
	-20 (-29)	47 (14)	63 (19)	95 (28)	126 (38)	158 (48)	95 (28)	126 (38)	190 (57)	253 (77)	316 (96)
	-40 (-40)	45 (13)	60 (18)	90 (27)	120 (36)	150 (45)	90 (27)	120 (36)	180 (54)	240 (73)	300 (91)

[Note]
1. The circuit lengths are based on trip current characteristics of Type QO and Type QCB devices. For devices with different trip characteristics please consult Marley Engineered Products.
2. Use local electrical codes to select appropriate branch circuit breakers.
3. The total length of heating cables connected to the circuit breaker is the sum of all cables that have been spliced or interconnected in parallel. Ensure that the total length does not exceed the maximum circuit length as indicated above.
4. Ground fault protection of equipment is required for heat tracing branch circuits with typical trip level of 30mA. Thermal magnetic breakers are recommended to reduce nuisance tripping.
5. It is recommended to start up the circuits at higher temperatures, when possible, to avoid large start-up or in-rush current which may trip the circuit breaker.
6. Standard 50-foot minimum length for all heat trace cables.

Technical information subject to change without notification.

MINERAL INSULATED

TYPE K & B INCOLOY SHEATH HEATING CABLE

Product Description

The Mineral Insulated type K & B heating cable is ideal for a wide range of industrial and commercial heating applications.

It has resistive heating conductors embedded in highly compressed magnesium oxide insulationand covered with a stainless Alloy 825 sheath. The sheath is fully annealed and is easily hand formable. The low resistance metallic sheath is an ideal ground path.

MI heating cable is totally inorganic and will not deteriorate with age. All heating units are factory fabricated to a specified length and rigorously tested to IEEE standards.

MI heating cable system is certified for ordinary and hazardous areas with maximum maintain temperature of 900°F(482°C) and intermittent exposure temperature of 1100°F(593°C). Use of Berko connection kits for MI installation is required to comply with system approval, ensuring safe operation and reliable thermal performance.

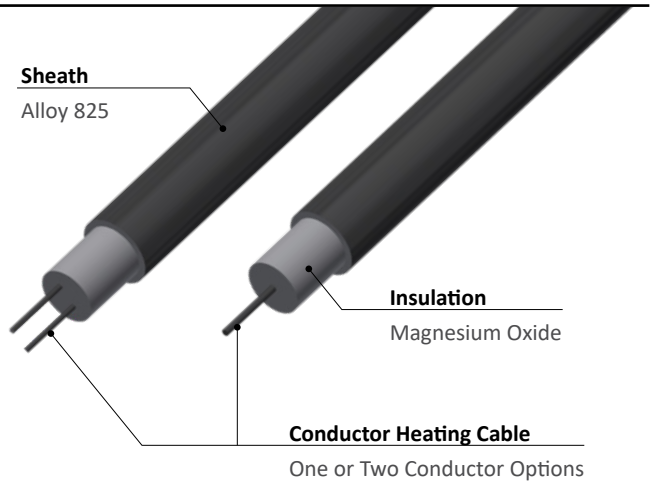

Specification *(Table 1)*

300 Volt, 2 Conductor 3/16" OD .07 lbs/ft		
Size	Ohms/ft	Max Exp Temp °F
K556	.043*	600
K658	.058*	600
K674	.074*	600
K693	.093*	600
K712	.117*	600
K715	.147*	600
K721	.213*	600
K732	0.319	1100
K742	0.416	1100
K752	0.52	1100
K766	0.66	1100
K774	0.74	1100
K810	1	1100
K813	1.3	1100
K818	1.8	1100
K824	2.34	1100
K830	2.96	1100
K838	3.7	1100
K846	4.72	1100
K860	5.6	1100
K866	6.6	1100
K894	9	1100
K919	18	1100

600 Volt, 2 Conductor 5/16" OD .22 lbs/ft		
Size	Ohms/ft	Max Exp Temp °F
B588	.0071*	600
B614	.0149*	600
B627	.027*	600
B640	.040*	600
B670	0.065	1100
B710	0.104	1100
B715	0.162	1100
B720	0.205	1100
B732	0.325	1100
B750	0.5	1100
B774	0.735	1100
B810	1.162	1100
B819	1.87	1100
B830	2.97	1100
B840	4.3	1100
B859	5.98	1100

600 Volt, 1 Conductor 3/16" OD .07 lbs/ft		
Size	Ohms/ft	Max Exp Temp °F
K145	.0046*	600
K189	.0090*	600
K216	.0165*	600
K239	0.039	1100
K250	0.05	1100
K279	0.079	1100
K310	0.095	1100
K316	0.157	1100
K326	0.26	1100
K333	0.33	1100
K346	0.457	1100
K372	0.73	1100
K412	1.17	1100
K415	1.48	1100
K423	2.36	1100
K430	2.8	1100
K447	4.5	1100

Ordering Information

BK-MIHT-*a-b-c-d*-e

BK-MIHT = Model Name
a = Heater Unit Hot Section Size (see *Table 1*)
b = Heater Unit Form (see *Table 2*)
c = Hot Section Length (ft)
d = Cold Section Length (ft)
e = Special Features (see *Table 3*)

Connection Kits

Berko offers system components for power connections, splice or tee connections and end terminations to ensure proper functioning of the products and comply with warranty and approvals requirements.

For easier installation and safe operation, use of substituted parts are not recommended. Please contact Berko for more information on system components.

Heater Forms *(Table 2)*

Form A
Two Conductor

Form B
One Conductor

Form B
Two Conductor

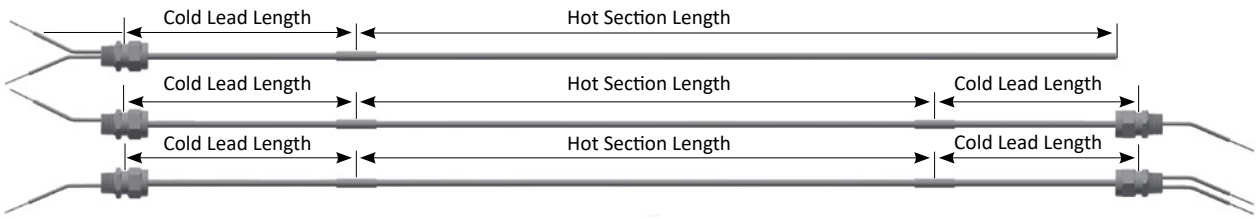

Form C
One Conductor

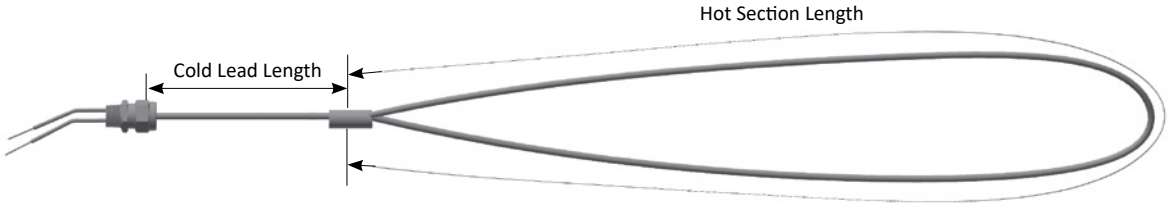

Special Features *(Table 3)*

Option	Description
C1	1/2" reversed gland on hot to cold joint
C2	3/4" reversed gland on hot to cold joint
E	Puller eye end cap
P	P.V.C.jacketed cold section
Q	High temperature adapter
R	Heater on non-returnable reel
U	Listed NEMA 7 termination fitting
X	Other, specify

03

CONNECTION KITS



MEP-HT-IPC-1

POWER CONNECTION; SINGLE HEATING CABLES

Product Description

The MEP-HT-IPC-1 is designed for pipe mounted power connection, splice or tee of up to (3) CRGX, LSRX, MSRX or HSRX cables. Third party approved for ordinary area and DIV 2 hazardous areas. Provided with cold applied core sealing, ¾ inch NPT conduit hole and spring terminals to accept up to #8 AWG wiring.



Dimensions

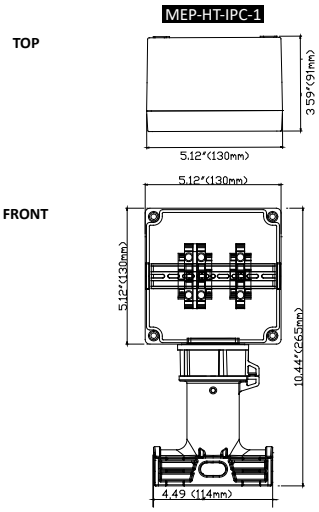

Certifications / Approvals

FM26US0013X, FM26CA0003X
Hazardous (classified) locations, indoors and outdoors
Class I, Division 2, Groups A, B, C, and D*
Class II/III, Division 2, Groups F and G*
Class I, Zone 1, AEx/Ex eb IIC* Gb
Zone 21, AEx/Ex tb IIIC* Db
Type 4X, IP66
* For T-rating please refer to cable documentation

Specification

Kit number	MEP-HT-IPC-1
Application	Power Connection for single heating cable
Heating cable capability (No. of heating cable entry)	LSRX, CRGX, MSRX, HSRX (One heating cable)
Supply voltage	100 ~ 277V
Ingress protection	NEMA Type 4X, IP66
Ambient temperature range	-40°F ~ 131°F
Minimum installation temperature	-40°F (-40°C)
Through hole for conduit	3/4" NPT
Maximum conductor sizes	8AWG
Maximum circuit breaker size	50A

[Note] MEP-HT-IPC-1 requires Berko MEP-HT-SPK-NPT34 Sealing Plug Kit for splice, tee connection or end termination.

Material Information

Contents	1 MEP-HT-IPC-1 series junction box assembly with terminal blocks 1 Pipe stand and O-ring 1 Compression cap, square-ring, locknut 3 Grommets(S, M, L) for different cable sizes 1 Core sealer	1 Insulation tube 1 RTV sealant 1 Wrench 1 Cable tie
Enclosure material	Glass reinforced polymer junction box Glass reinforced polymer lid with stainless steel screws Glass reinforced polymer box stand	
Installation accessories (Sold separately)	Conduit and fittings Sealing plug kit Pipe straps Fiberglass tape Aluminum tape	
Tools required	Wire cutters, Utility knife, Marking pen Large slotted screwdriver 3/16"(or 5mm) hex key Adjustable pliers, Needle nose pliers	

[NOTE] Refer to the MEP-HT-IPC-1 Kit Installation Instructions for full and current material details.

MEP-HT-IMC-3

POWER CONNECTION; MULTIPLE HEATING CABLES

Product Description

The MEP-HT-IMC-3 is designed for pipe mounted power connection of CRGX, LSRX, MSRX and HSRX cables. Third party approved for ordinary area and DIV 2 hazardous areas. Provided with cold applied core sealing, ¾ inch NPT conduit hole and spring terminals to accept up to #8 AWG wiring.



Dimensions

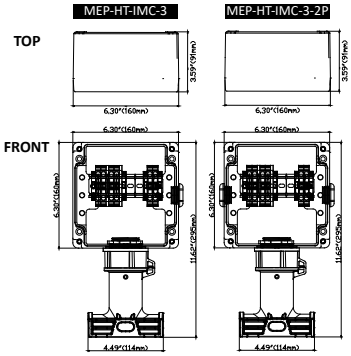

Certifications / Approvals

FM26US0013X, FM26CA0003X
Hazardous (classified) locations, indoors and outdoors
Class I, Division 2, Groups A, B, C, and D*
Class II/III, Division 2, Groups F and G*
Class I, Zone 1, AEx/Ex eb IIC* Gb
Zone 21, AEx/Ex tb IIIC* Db
Type 4X, IP66
* For T-rating please refer to cable documentation

Specification

Kit number	MEP-HT-IMC-3	MEP-HT-IMC-3-2P
Application	Power Connection for a maximum of three self-regulating heating cables	Dual Power Connection for two self-regulating heating cable circuits
Heating cable capability (No. of heating cable entry)	LSRX, CRGX, MSRX, HSRX (Up to three heating cables)	LSRX, CRGX, MSRX, HSRX (Two heating cable circuits)
Supply voltage	100 ~ 277V	100 ~ 277V
Ingress protection	NEMA Type 4X, IP66	NEMA Type 4X, IP66
Ambient temperature range	-40°F ~ 131°F (-40°C ~ 55°C)	-40°F ~ 131°F (-40°C ~ 55°C)
Minimum installation temperature	-40°F (-40°C)	-40°F (-40°C)
Through hole for conduit	3/4NPT X 1	3/4NPT X 2
Maximum conductor sizes	8AWG (10mm²)	8AWG (10mm²)
Maximum circuit breaker size	50A	50A

[Note] MEP-HT-IMC-3 requires Berko MEP-HT-SPK-NPT34 Sealing Plug Kit for splice, tee connection or end termination.

Material Information

Contents	1 MEP-HT-IMC-3 series junction box assembly with terminal blocks 1 Pipe stand and O-ring 1 Compression cap, square-ring, locknut 3 Grommets(S, M, L) for different cable sizes 1 Core sealer	1 Insulation tube 1 RTV sealant 1 Wrench 1 Cable tie
Enclosure material	Glass reinforced polymer junction box Glass reinforced polymer lid with stainless steel screws Glass reinforced polymer box stand	
Installation accessories (Sold separately)	Conduit and fittings Sealing plug kit Pipe straps Fiberglass tape Aluminum tape	
Tools required	Wire cutters, Utility knife, Marking pen Large slotted screwdriver 3/16"(or 5mm) hex key Adjustable pliers, Needle nose pliers	

[NOTE] Refer to the MEP-HT-IMC-3 Kit Installation Instructions for full and current material details.

MEP-HT-IST-1

SPLICE OR TEE CONNECTION, END TERMINATION

Product Description

The MEP-HT-IST-1 is designed for pipe mounted splice or tee of up to (3) CRGX, LSRX, MSRX and HSRX cables. Third party approved for ordinary area and DIV 2 hazardous areas. Provided with cold applied core sealing and spring terminals to accept up to #8 AWG wiring.



Dimensions

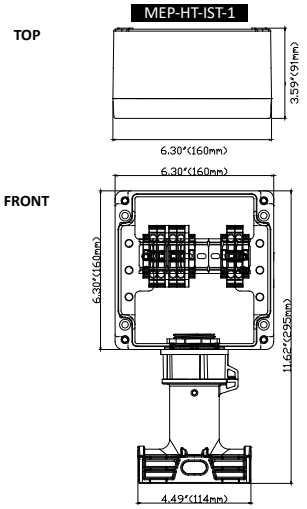

Certifications / Approvals

FM26US0013X, FM26CA0003X
Hazardous (classified) locations, indoors and outdoors
Class I, Division 2, Groups A, B, C, and D*
Class II/III, Division 2, Groups F and G*
Class I, Zone 1, AEx/Ex eb IIC* Gb
Zone 21, AEx/Ex tb IIIC* Db
Type 4X, IP66
* For T-rating please refer to cable documentation

Specification

Kit number	MEP-HT-IST-1
Application	Splice or Tee Connection, End Termination
Heating cable capability (No. of heating cable entry)	LSRX, CRGX, MSRX, HSRX (Up to three heating cables)
Supply voltage	100 ~ 277V
Ingress protection	NEMA Type 4X, IP66
Ambient temperature range	-40°F ~ 131°F (-40°C ~ 55°C)
Minimum installation temperature	-40°F (-40°C)
Through hole for conduit	N/A
Maximum conductor sizes	8AWG (10mm²)
Maximum circuit breaker size	50A

Material Information

Contents	1 MEP-HT-IST-1 series junction box assembly with terminal blocks 1 Pipe stand and O-ring 1 Compression cap, square-ring, locknut 3 Grommets(S, M, L) for different cable sizes 1 Core sealer	1 Insulation tube 1 RTV sealant 1 Wrench 1 Cable tie
Enclosure material	Glass reinforced polymer junction box Glass reinforced polymer lid with stainless steel screws Glass reinforced polymer box stand	
Installation accessories (Sold separately)	Conduit and fittings Sealing plug kit Pipe straps Fiberglass tape Aluminum tape	
Tools required	Wire cutters, Utility knife, Marking pen Large slotted screwdriver 3/16"(or 5mm) hex key Adjustable pliers, Needle nose pliers	

[NOTE] Refer to the MEP-HT-IST-1 Kit Installation Instructions for full and current material details.

MEP-HT-IES-1

END SEAL OR IN-LINE SPLICE CONNECTION

Product Description

The MEP-HT-IES-1 is designed for pipe mounted, above insulation, end termination or splice of up to (2) CRGX, LSRX, MSRX and HSRX cables. Third party approved for ordinary area and DIV 2 hazardous areas. Provided with cold applied end sealing cap.



Dimensions

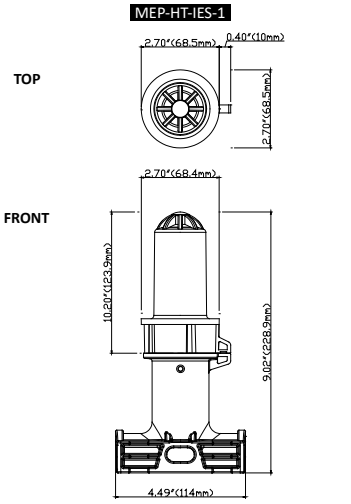

Certifications / Approvals

FM26US0013X, FM26CA0003X
Hazardous (classified) locations, indoors and outdoors
Class I, Division 2, Groups A, B, C, and D*
Class II/III, Division 2, Groups F and G*
Class I, Zone 1, AEx/Ex eb IIC* Gb
Zone 21, AEx/Ex tb IIIC* Db
Type 4X, IP66
* For T-rating please refer to cable documentation

Specification

Kit number	MEP-HT-IES-1
Application	End Seal / In-line Splice Connection
Heating cable capability (No. of heating cable entry)	LSRX, CRGX, MSRX, HSRX (Up to two heating cables)
Supply voltage	100 ~ 277V
Ingress protection	NEMA Type 4X, IP66
Ambient temperature range	-40°F ~ 131°F (-40°C ~ 55°C)
Minimum installation temperature	-40°F (-40°C)

Material Information

Contents	1 End cap 1 Pipe stand and O-ring 3 Grommets(S, M, L) for different cable sizes 2 Rubber end caps	1 RTV sealant 1 Wrench 1 Cable tie
Required for splice connection (Sold separately)	MEP-HT-SK-1, consists of: 2 Core sealers (S) 2 Insulation tubes Y/G (S) 3 Closed end connectors 1 RTV sealant	
Enclosure material	Glass reinforced polymer end cap Glass reinforced polymer pipe stand	
Installation accessories (Sold separately)	Pipe straps Fiberglass tape Aluminum tape	
Tools required	Wire cutters, Utility knife, Marking pen Large slotted screwdriver Adjustable pliers, Needle nose pliers Molex RHT-7000 crimp tool or equivalent; 10-16AWG slot (For in-line splice connection only)	

[NOTE] Refer to the MEP-HT-IES-1 Kit Installation Instructions for full and current material details.

MEP-HT-IESL-R/G

LIGHTED END SEAL

Product Description

The MEP-HT-IESL-R/G is designed for pipe-mounted, above-insulation end termination of CRGX, LSRX, MSRX and HSRX cables. It features red or green LED circuit status indication. Third-party approved for ordinary and Division 2 hazardous areas. Provided with a cold-applied core sealer and wire terminations.



MEP-HT-IESL-R



MEP-HT-IESL-G

Certifications / Approvals

FM26US0013X, FM26CA0003X
Hazardous (classified) locations, indoors and outdoors
Class I, Division 2, Groups A, B, C, and D*
Class II/III, Division 2, Groups F and G*
Class I, Zone 1, AEx/Ex eb IIC* Gb
Zone 21, AEx/Ex tb IIIC* Db
Type 4X, IP66
* For T-rating please refer to cable documentation

Specification

Kit number	MEP-HT-IESL-R, MEP-HT-IESL-G
Application	Lighted End Seal
Heating cable capability (No. of heating cable entry)	LSRX, CRGX, MSRX, HSRX (One heating cable)
Supply voltage	100 ~ 240V
Ingress protection	NEMA Type 4X, IP66
Ambient temperature range	-40°F ~ 131°F (-40°C ~ 55°C)
Minimum installation temperature	-40°F (-40°C)

Material Information

Contents	1 Lighted end cap 1 Pipe stand and O-ring 3 Grommets(S, M, L) for different cable sizes 2 Closed end connectors	1 Core Sealer (S) 1 RTV sealant 1 Wrench 1 Cable tie
Enclosure material	Glass reinforced polymer end cap Glass reinforced polymer pipe stand	
Installation accessories (Sold separately)	Pipe straps Fiberglass tape Aluminum tape	
Tools required	Wire cutters, Utility knife, Marking pen Large slotted screwdriver Adjustable pliers, Needle nose pliers Molex RHT-7000 crimp tool or equivalent; 10-16AWG slot	

[NOTE] Refer to the MEP-HT-IESL-R/G Kit Installation Instructions for full and current material details.

04

ADDITIONAL PRODUCTS



THERMOSTATS & CONTROLLERS



DESCRIPTION: Mechanical Thermostat
- 22 amp switching current SPDT, 120/250/480 V
- Non-hazardous area
- HTTS-A: ambient sensing
- HTTS-L: line sensing

PART NUMBER:
HTTS-A
HTTS-L



DESCRIPTION: Mechanical Thermostat
- 22 amp switching current SPDT, 120/250/480 V
- Class I, Division 1 and 2, Group B,C,D
- HTTS-EPA: ambient sensing
- HTTS-EPL: line sensing

PART NUMBER:
HTTS-EPA
HTTS-EPL



DESCRIPTION: Single-Stage Heavy-Duty Thermostat
- Liquid filled sensing element with snap-acting contacts
- Range: -300° to 1000°F
- Differential: 3 to 120 F between stages
- Bulb Dimensions: 3/8" x 4"
- Capillary Length: 8"
- Resistive Rating: 22 amps, 120-277 V

PART NUMBER:
1023953



DESCRIPTION: Heat Trace Microprocessor Temperature Controller
- 30 amp switching current SSR, 85-280 V
- Class I, Division 2, Group B,C,D
- Ground fault current alarm and trip
- Alarm and communication capabilities
- Single (-1) and dual circuit (-2)

PART NUMBER:
HTCTRLR-1
HTCTRLR-2



DESCRIPTION: Master Trace Multi-Circuit Temperature Control Panel
- 30 amp switching current SSR, 280 V max
- Class I, Division 2, Group A,B,C,D
- Ground fault current alarm and trip
- Alarm and communication capabilities
- 5 circuit (-5), 10 circuit (-10), custom circuit quantity (-X)

PART NUMBER:
HTCTRLUNIT-5
HTCTLRUNIT-10
HTCTRLRUNIT-X



DESCRIPTION: Armored RTD Cable and Cord Grip with 25' Leads

PART NUMBER:
HTRTD-25

ACCESSORIES



DESCRIPTION: Plug-in Connection Kit with GFEP

PART NUMBER:
HT-CPCGFEP1



DESCRIPTION: Hard Wired Connection Kit w/ Metal Gland

PART NUMBER:
HT-CPCG-1



DESCRIPTION: Tee and Splice Connection Kit

PART NUMBER:
HT-CTS-1



DESCRIPTION: End Seal Kit

PART NUMBER:
HT-CES-1

05

DATA FORMS



470 Beauty Spot Road East
Bennettsville, SC 29512
www.MarleyMEP.com

Date _____ Job Reference _____
Company Name _____
Address _____
City _____ State _____ Zip _____
Customer Contact _____
Phone No. _____
E-Mail Address _____
Site Delivery Requirement: _____

Heat Trace Design Guide

Download the form and fill out all known information. Once complete, email to HeatTraceOrders@spx.com

INSTALLATION INFORMATION:

Site Low Ambient Temperature: _____

Site High Ambient Temperature: _____

Overall Quantity: _____

Individual Lengths Required (if applicable): _____

HEAT TRACE DATA

Pipe Diameter: _____

Pipe length: _____

Insulation Thickness: _____

Maintain Temperature: _____

Maximum Exposure Temperature: _____

Line Sensing Control: _____

Hazardous Area / Class & Division: _____

# of valves in line (if known): _____

# of pipe supports in line (if known): _____

Pipe Type (metal/plastic): _____

Insulation Type: _____

Indoor / Outdoor Location: _____

Minimum Ambient Temperature: _____

Operating Voltage (120,208,240,277): _____

Ambient Sensing Control: _____

Hazardous Area T-Rating: _____

# of flanges in line (if known): _____

# of tees in line (if known): _____

CONTROL METHOD (IF APPLICABLE)

Line Sensing Thermostat: _____

Electronic Controller: _____

SPECIAL NOTES:

Installation & Maintenance Form

Location: _____ System: _____ Reference Drawing(s): _____

CIRCUIT INFORMATION

Heater Cat. No.: _____ Circuit Length: _____ Bkr. Panel No.: _____

Power Connection: _____ Design Voltage: _____ Bkr. Pole(s) No.: _____

Tee Connection: _____ Ground-Fault Protection (type): _____

Splice Connection: _____ Ground-Fault Trip Setting: _____

Heater Control: _____ Operating Voltage: 120 208 240 277

VISUAL

Panel Number	Circuit #					
	Date					
	Initial					
Thermal Insulation						
Damaged Insulation / Lagging						
Water Seal Good						
Insulation / Lagging Missing						
Presence of Moisture						
Heating System Components						
Enclosures, Boxes Sealed						
Presence of Moisture						
Sign of Corrosion						
Heater Lead Discoloration						
Heating and/or High Limit Controller						
Operating Properly						
Controller Setpoint						

ELECTRICAL

Dielectric Insulation Resistance (Bypass Controller) Refer to IEEE-2017 for test voltages and pass/fail criteria						
Test Voltage						
Megger Value						
Heater Supply Voltage						
Value at Power Source						
Value at Field Connection						
Heater Circuit Current Reading						
Pipe Temperature						
Amps Reading at 2-5 min.						
Amps Reading After 15 min.						
Ground-Fault Current						

Comments and Actions:

Performed by: Company: Date:

Approved by: Company: Date:

BERKO®

HEAT.
ANYTIME.
ANYWHERE.



We have the experience and expertise to provide personalized support and help you arrive at customized solutions

Find your nearest Berko representative

Email HeatTraceOrders@spx.com or visit
marleymep.com/heat-trace-product-inquiry

470 Beauty Spot Road East, Bennettsville, South Carolina | **Marleymep.com**