BERKO®
A Marley Engineered Products Brand
470 Beauty Spot Rd. E
Bennettsville, SC 29512

SUBMITTAL SHEET
GFR SERIES
FAN-FORCED REGISTER STYLE WALL HEATER

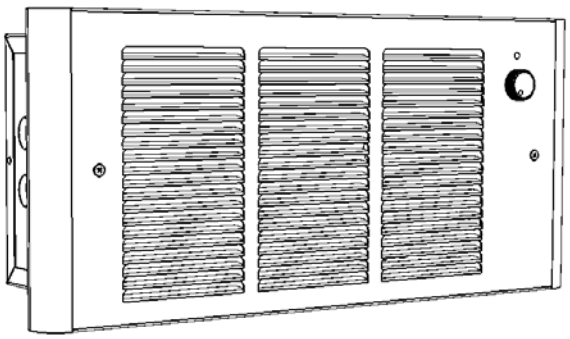

Intertek

CAPACITIES
375–2400W 120 or 240V 1Ø only Thermostat Range: 40°–85° F Air Movement: 50 CFM

See Selection Chart for all Options

JOB NAME: _____

LOCATION: _____

ARCHITECT: _____

ENGINEER: _____

CONTRACTOR: _____

SUBMITTED BY: _____ DATE: _____

TAG/ITEM	QTY.	CATALOG NUMBER	HEATER			AMPS	WEIGHT
			KW	VOLTS	Ø		

ACCESSORIES AND CONTROLS	TAG/ITEM	QTY.	CATALOG NUMBER	DESCRIPTION

SUBMITTED BY:	DATE

APPROVED BY:	DATE

GFR SERIES

ARCHITECT'S AND ENGINEER'S SPECIFICATIONS*

The heating equipment shall include an electric automatic fan forced air heater suitable for small area heating, as manufactured by Berko,® a Marley Engineered Products® Brand, Bennettsville, SC. The heater shall be designed for wall mounting, recess or surface. Heaters shall be cETLus listed.

BACK BOX: The back box shall be designed as a recessed rough-in box in either masonry or frame installations and is also used when surface mounting frames are used in surface mounting installations. The back box shall be heavy gauge galvanized steel and shall contain knockouts through which power leads enter.

INNER FRAME ASSEMBLY: The heater assembly, which fits into the back box, shall consist of a heavy gauge steel fan panel to which all of the operational parts of the heater are mounted. The inner frame assembly shall be completely prewired.

HEATING ELEMENT: The heating element shall be of the non-glowing design consisting of an 80/20 nickel-chromium resistance wire enclosed in a steel sheath to which plate fins are copper brazed. The element shall cover the entire air discharge area to ensure uniform heating of all discharged air. It shall be warrantied for 5 years.

MOTOR AND CONTROLS: The fan motor shall be a shaded 2 pole, impedance protected, class B"insulation with permanently lubricated. The thermostat shall be singlepole type on all models. Thermal cutout shall be to self-hold (manual-reset), snap-action type designed to shut off heat in the event of overheating. The fan shall be tangential blower for whisper quiet operation.

SURFACE MOUNTING FRAME: The surface mounting frame shall be of heavy gauge steel designed to mount around the back box for a finished surface installation. Slot knock outs shall be provided for power supply conduit.

FRONT COVER: The louvered front cover shall be of heavy gauge steel with a powder paint finish.

FINISH: All sheet metal parts, except the galvanized steel back box, shall be phosphatized, then completely painted by a powder paint process.

**Berko reserves the right to change specifications without prior notice.*

Models & Specifications:

		ELECTRICAL DATA					
CATALOG NO.	UPC	VOLTS	WATTS	AMPS	BTU/HR.	BUILT-IN THERMOSTAT	SHIP WT.
GFR1500T2F	685360033693	120	1500/1125/750/375	12.5/9.4/6.3/3.1	5120–1280	Double Pole	11 lbs
GFR2004T2F	685360033747	240*	2000/1500/1000/500	8.3/6.3/4.2/2.1	6826–1706	Double Pole	11 lbs
GFR2404T2F	685360033778	240*	2400/1800/1200/600	10.0/7.5/5.0/2.5	8192–2048	Double Pole	11 lbs

NOTE: For wall mounting only. Do not install back box closer than 4 in. from floor, 6 in. from adjacent walls and 36 in. from the ceiling. Do not install heater behind towel rack, behind door, in floor, in closet, in ceiling or where airflow may be obstructed. To insure proper operation, maintain 5 ft. minimum clearance to furniture or other objects placed directly in front of the heater.

*Will operate on 208V at 75% of rated wattages. For installations over 7,500 ft. above sea level we recommend using models under 1500 watts. "T2F" Model are complete heater assemblies with grille, back box, and thermostat.

Optional Accessories:

CATALOG NO.	UPC	DESCRIPTION	COLOR	SHIP WT.
GFRBB	685360033631	Single Backbox For GFR Series Heater	—	2 lbs
QFGTDP	685360059259	Double-Pole Thermostat (Field-Installed)	—	1 lbs
GFRSM	685360059266	Surface Mounting Frame	White	2 lbs

Dimensions and Clearances:

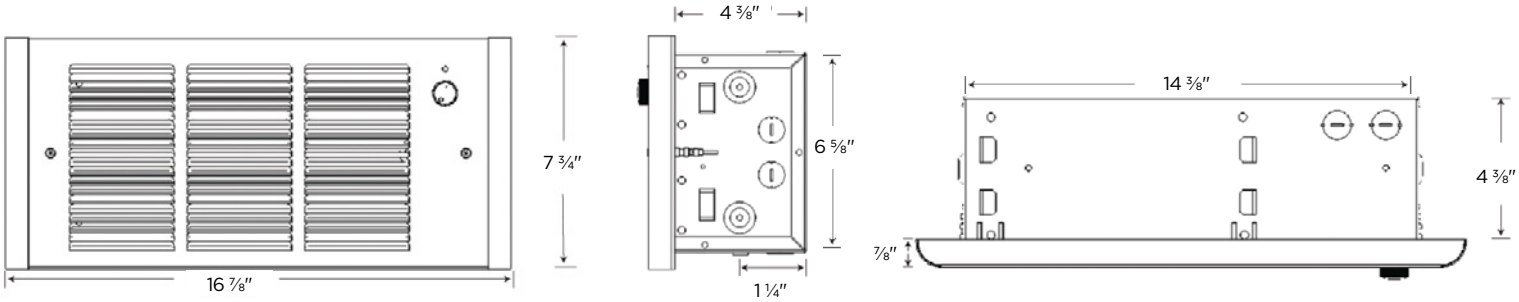

No matter the industry or application, Marley Engineered Products has a robust portfolio of innovative, reliable, high-performance comfort heating and ventilation solutions for all your heating needs.

For more information or assistance on your next project, contact Technical Services at 800-642-4328

Scan the QR code to access additional specs and features

Approvals: _____ _____ _____