Marley®
Engineered Products

R Series
B & T2 Model
Fan Forced Wall Heaters

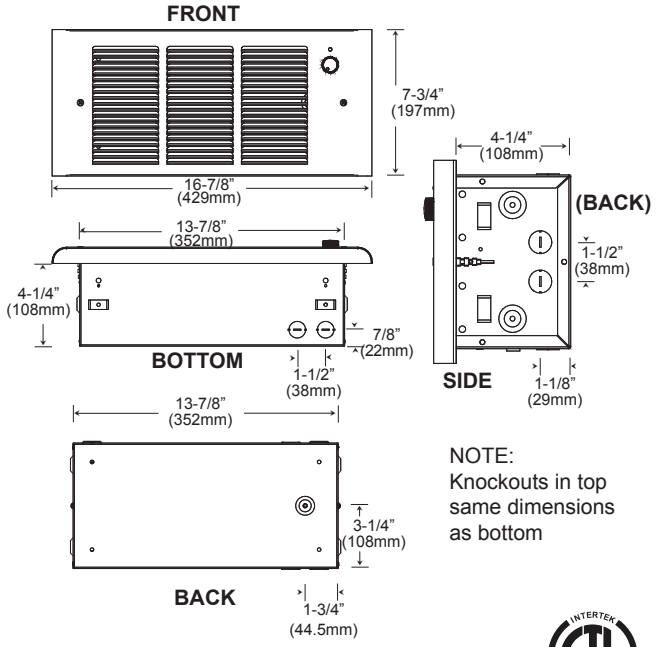

Installation, Operation & Maintenance Instructions

IMPORTANT INSTRUCTIONS

⚠ WARNING ⚠

WHEN USING ELECTRIC APPLIANCES, BASIC PRECAUTIONS SHOULD ALWAYS BE FOLLOWED TO REDUCE THE RISK OF FIRE, ELECTRIC SHOCK, AND INJURY TO PERSONS, INCLUDING THE FOLLOWING:

1. Read all instructions before installing or using this heater.
2. This heater is hot when in use. To avoid burns, do not let bare skin touch hot surfaces. Keep combustible materials, such as furniture, pillows, bedding, papers, clothes, etc. and curtains at least 3 feet (0.9 m) from the front of the heater.
3. Extreme caution is necessary when any heater is used by or near children or invalids and whenever the heater is left operating and unattended.
4. Do not operate any heater after it malfunctions. Disconnect power at service panel and have heater inspected by a reputable electrician before using.
5. Do not use outdoors.
6. To disconnect heater, turn controls to off, and turn off power to heater circuit at main disconnect panel.
7. Do not insert or allow foreign objects to enter any ventilation or exhaust opening as this may cause an electric shock, fire, or damage to the heater.
8. To prevent a possible fire, do not block air intake or exhaust in any manner.
9. A heater has hot and arcing or sparking parts inside. Do not use it in areas where gasoline, paint, or flammable liquids are used or stored.
10. Use this heater only as described in this manual. Any other use not recommended by the manufacturer may cause fire, electric shock, or injury to persons.
11. This heater is provided with a red alarm light that will illuminate only if the heater has turned off as a result of overheating. If you see the light on, immediately turn the heater off and inspect for any objects on or adjacent to the heater that may have blocked the airflow or otherwise caused high temperatures to have occurred. **DO NOT OPERATE THE HEATER WITH THE ALARM LIGHT ILLUMINATING.**
12. This heater is intended for comfort heating applications and not intended for use in special environments. Do not use in damp or wet locations such as marine or greenhouse or in areas where corrosive or chemical agents are present.
13. When installing, see INSTALLATION INSTRUCTIONS for additional warnings and precautions.
14. For safe and efficient operation, and to extend the life of your heater, keep your heater clean - See MAINTENANCE INSTRUCTIONS.

SAVE THESE INSTRUCTIONS

INSTALLATION INSTRUCTIONS

⚠ WARNING ⚠

To prevent a possible fire, injury to persons or damage to the heater, adhere to the following:

1. Disconnect all power coming to heater at main service panel before wiring or servicing.
2. All wiring procedures and connections must be in accordance with the National and Local Codes having jurisdiction and the heater must be grounded.
3. Power supply must enter back box through the knockouts. See also TOP marking on the back box for proper orientation.
4. Verify the power supply voltage coming to heater matches the ratings as shown on the heater nameplate.

CAUTION: ENERGIZING HEATER AT A VOLTAGE GREATER THAN THE VOLTAGE PRINTED ON THE NAMEPLATE WILL DAMAGE THE HEATER AND VOID THE WARRANTY AND COULD CAUSE A FIRE.

5. **CAUTION** - High temperature, risk of fire, keep electrical cords, drapery, furnishings, and other combustibles at least 3 feet (0.9 m) from front of heater. Do not install heater behind doors, below towel racks, or in an area where it is subject to being blocked by furniture, curtains or storage materials. Hot air from the heater may damage certain fabrics and plastics.
6. To reduce the risk of fire, do not store or use gasoline or other flammable vapors and liquids in the vicinity of the heater.
7. This heater is to be wall mounted only using back box model RBB with the mounting rails to the top (see Figure 2B). Do not install sideways, upside down, in the ceiling or floor.
8. The following minimum clearances must be maintained:

   Bottom of heater to floor - 4" (102 mm).

   Sides of heater to adjacent wall - 6" (152 mm).

   Top of heater to ceiling - 36" (915 mm).
9. Do not operate the heater without the grille installed.
10. Do not use this heater for dry out as the paint, plaster, sawdust and drywall sanding dust will permanently damage the heater and must be kept out of the heater.

The "R" Series heaters are designed for recessed installation in standard 2 x 4 (50 mm X 100 mm) or larger stud walls with the back box mounted as shown in either Figure 1, or Figure 2.

NOTE: Heater should be controlled by either built-in thermostat or remote wall thermostat. Models with "T2" suffix are equipped with built-in thermostat.

This heater may be wired with standard building wiring (rated minimum 60° C). Refer to Table 3 for appropriate wire size for the heater to be used.

Note To Installer

The "IF" models do not include a backbox. The Backbox is ordered separately. In the parts bag for "IF" models, there is a white label that indicates multiple wattage and must be placed in the backbox on the bottom right-hand side. When making wattage changes, the installer must circle the wattage on the white label before installing the heat deck.

Installation of Back Box (Model RBB) In New Construction Wall Studs 16" OC. (Refer to Figure 1)

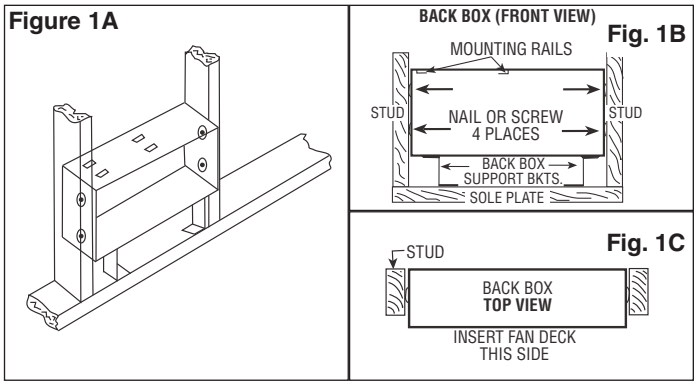

NOTE: Please review Minimum Clearances, Warning #8.

1. Locate back box (model RBB) and back box support brackets (2). Back box must be installed with mounting rails to the top (see Figure 1B).
2. Install back box support brackets with foot tabs directed towards the center of the back box as shown in Figure 1A and 1B. It may be necessary to bend up slightly the tab on the back box support bracket to allow insertion under the mounting lances on the bottom of the back box.
3. Determine which knockout in back box will be used for field wiring and remove (see back box drawing pg.1). Install strain relief (field supplied). See warning No. 13.
4. Fish field wiring through strain relief leaving 6" of wire inside box.
5. Insert back box assembly into wall. The front of the back box should be flush with the finished wall surface or it may protrude slightly. The back box should never be recessed into the wall. (see Figure 1C). The back box support brackets should be resting on the sole plate of the stud wall to insure proper spacing and leveling (see Figure 1B).
6. Using four (4) wood screws or drywall screws or four (4) nails (field supplied), secure back box to studs (see Figure 1B). Back box support brackets can now be removed. If not removed, secure to sole plate.

Installation of Back Box In New Construction - Wall Stud Spacing Greater Than 16" OC. (Refer to Figure 2)

NOTE: Please review Minimum Clearances, Warning #8 on page 2.

NOTE: Figure 2 depicts the back box installed with the left side adjoining stud. For a box with the right side adjoining a stud, reverse the directions shown below.

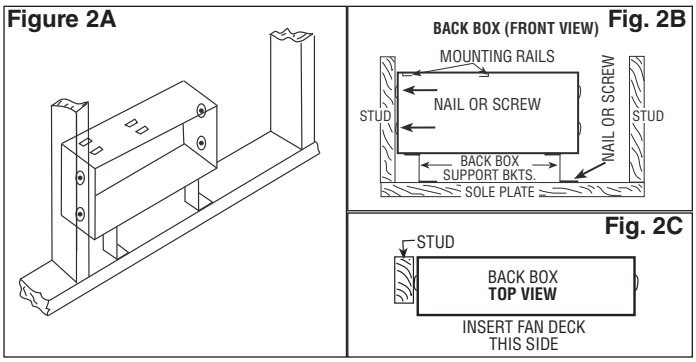

1. Locate back box and back box support brackets (2). Back box must be installed with mounting rails to the top (see Figure 2B)
2. Determine which side of the back box will adjoin stud and insert back box support bracket on that side with foot tab directed towards center of back box. On the side of the back box that will not adjoin stud, install back box support bracket on that side with foot tab directed towards end of box and secure to box with 3/8" long sheet metal screw (provided). See Figure 2A
3. Determine which knockout in back box will be used for field wiring and remove (see back box drawing pg. 1). Install strain relief (field supplied).
4. Fish field wiring through strain relief leaving 6" of wire inside box.
5. Insert back box assembly into wall. The front of the back box should be flush with the finished wall surface or it may protrude slightly. The back box should never be recessed into the wall. (see Figure 2). The back box support brackets should be resting on the sole plate of the stud wall to insure proper spacing and leveling (see Figure 2B).
6. Use two (2) wood screws or drywall screws or two (2) nails (field supplied) to secure the side of the back box that adjoins a stud. Use one (1) wood screw or drywall screw or one (1) nail (field supplied) to secure the foot tab of the back box support bracket (that is on the end opposite the stud) to the sole plate (see Figure 2B).

Installation of Back Box In Existing Construction

NOTE: Please review Minimum Clearances, Warning 8 on page 2.

1. Locate wall studs to be sure that entire cut-out can be made between studs. At least one side of the cut-out must be flush with side of the stud. Bottom of cut-out must be 4" above finished floor minimum. Make a cut-out in wall 14-1/2" wide X 6-3/4" high (368 mm X 171 mm) (see Figure 3).
2. Determine which knockout in back box will be used for field wiring and remove (see back box drawing, pg.1). Install strain relief (field supplied).
3. Fish field wiring through strain relief leaving 6" of wire inside box.
4. Insert back box into cut-out. The front of the back box should be flush with the finished wall surface or it may protrude slightly. The back box should never be recessed into the wall. beyond the finished surface(see Figure 1C or 2C).

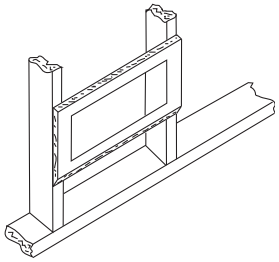

Figure 3

5. Using four (4) wood screws or drywall screws (field supplied) or four (4) nails (field supplied), secure back box to studs (see Figure 1B). If wall studs are greater than 16"oc., use only 2 fasteners and on the opposite end of the back box drive a 1" sheet metal screw (provided) through hole in end cap. This will draw the back box tight with drywall when grille is installed. (See Figure 4.)

TO INSTALL THERMOSTAT ASSEMBLY (T2 only)

NOTE: Thermostat assembly should not be installed until after the drywall phase of construction is complete. Dust from drywall installation and joint compound can be harmful if it gets inside thermostat assembly components.

1. The thermostat must be installed in right end of the heater.
2. Position thermostat above slot in right end of back box. Push tab on thermostat bracket through slot in top, right end of back box until the bracket locks in place. See Figure 5.
3. If the thermostat is controlling more than one heater, the total of all heater amperage ratings (Table 1) cannot exceed 25 amps at 120 volts AC thru 240 volts AC. Refer to Table 2 for

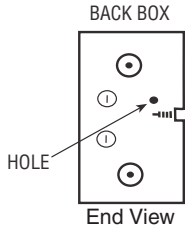

Figure 4

4. Connect one red and one black thermostat lead to power wiring per wiring diagram (Figure 7) using properly sized listed wirenuts (provided).
5. Fold wires back into wiring compartment behind thermostat to clear fan deck.

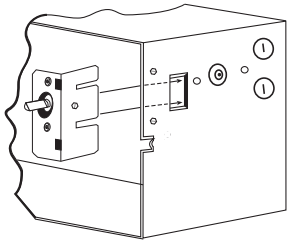

Figure 5

TO INSTALL FAN DECK ASSEMBLY

NOTE: Fan deck assembly should not be installed until after the drywall phase of construction is complete. Dust from drywall installation and joint compound can be harmful if it gets inside fan deck components.

1. Locate fan deck and mounting rails in top of back box.
2. Insert flanges on fan deck into mounting rails and slide back until fan deck stops (see Figure 6).
3. Make wiring connections, attaching one red and one black thermostat lead to two (2) black heater leads for 240V or to black and white heater leads for 120V with wirenuts (provided). Connect field ground lead to bare ground wire with wirenut (provided). See Figure 7.
4. Remove 1/2" knockout from grille and install grille using two oval head screws. Push thermostat knob on thermostat shaft.
5. Reconnect power at main fuse or circuit breaker distribution panel.

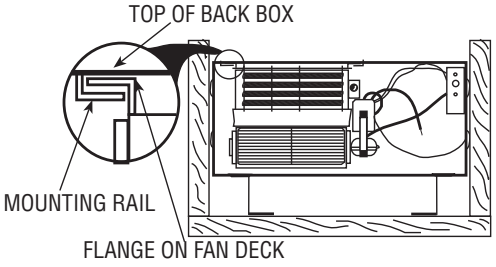

Figure 6

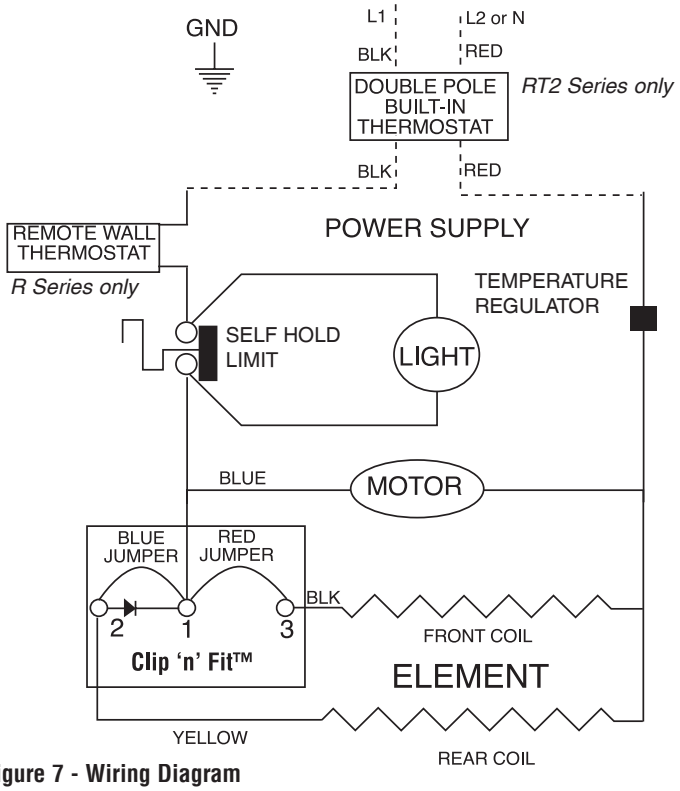

Figure 7 - Wiring Diagram

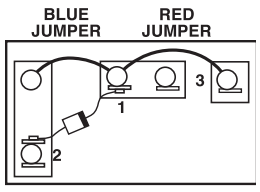

Figure 8 Clip'n'Fit® Board

TO CHANGE WATTAGE OUTPUT

The chart shows the wattages available by model. Each heater is factory wired for its maximum wattage. The last two columns in the chart refer to the jumpers on the CLIP 'n' Fit® Board. To change wattage, clip out Jumper 1 and/or Jumper 2 as shown in the chart below. Completely remove jumpers by clipping at both ends as close to the board as possible (See Figure 8).

WATTAGE					JUMPER 1	JUMPER 2
R2404FC & R2404T2FC		R2004FC & R2004T2FC		R1500FC & R1500T2FC		
@240V	@208V	@240V	@208V	@120V	Blue Jumper	Red Jumper
2400	1800	2000	1500	1500	Leave in	Leave in
1800	1350	1500	1125	1125	Clip out	Leave in
1200	900	1000	750	750	Leave in	Clip out
600	450	500	375	375	Clip out	Clip out

TABLE 1

MODEL	VOLTS	WATT/AMP	WATT/AMP	WATT/AMP	WATT/AMP
R1500FC R1500T2FC	120	1500/12.5	1125/9.4	750/6.3	375/3.1
R2004FC	240	2000/8.3	1500/6.3	1000/4.2	500/2.1
R2004T2FC	208	1500/7.2	1125/5.4	750/3.6	375/1.8
R2404FC	240	2400/10.0	1800/7.5	1200/5.0	600/2.5
R2404T2FC	208	1800/8.7	1350/6.5	900/4.3	450/2.2

TABLE 2

TOTAL AMPS	WIRE SIZE (COPPER)	CIRCUIT BREAKER OR FUSE SIZE
0 thru 12	#14	15 Amps
12.1 thru 16	#12	20 Amps
16.1 thru 24	#10	30 Amps

OPERATING INSTRUCTIONS

1. Heater must be properly installed before operation.
2. After heater is completely assembled, rotate thermostat knob counterclockwise until control stops. This is the minimum heat setting.
3. Turn power supply to heater "ON" at main switch panel.
4. Heater should not operate. If it operates disconnect power and recheck wiring.
5. Rotate thermostat clockwise until it stops (maximum heat setting).
6. Heater and fan should come on. If heater and fan do not come on, disconnect power and check wiring.
7. Allow heater to continue to operate until room temperature reaches desired comfort level. Then rotate thermostat knob counterclockwise slowly until thermostat clicks off.

8. It may be necessary to readjust thermostat a time or so until exact comfort level is attained. Rotation in the clockwise direction will increase the amount of time the heater will produce heat. Rotation in the counterclockwise direction will reduce the amount of time the heater is on.

NOTE: For best results, the heater should be left "ON" constantly during the heating season as the thermostat, when properly set, will maintain the desired temperature. In the full counterclockwise position the heater will remain off until the room temperature drops well below freezing.

How To Reset Over -Temperature Safety Control:

This heater is provided with an over-temperature safety control that will turn the heater off if the heater overheats. If this control operates, a red warning light, visible through the front of the grille, will illuminate to alert the owner that the heater is off and requires attention.

⚠ WARNING ⚠

DO NOT TAMPER WITH OR BYPASS ANY SAFETY LIMITS INSIDE HEATER.

1. Turn the heater off at the thermostat or disconnect power at the circuit breaker for at least 10 minutes to allow the heater to cool and the safety control to reset.
2. When the heater has cooled, check to see if the heater is blocked or excessively dirty as these conditions may cause overheating. Remove any blockages and/or refer to the **Cleaning Heater** section for cleaning instructions if dirty.
3. Turn circuit breaker on, reset thermostat to desired setpoint, and verify the heater is operating normally.
4. If the heater malfunctions again and the red light illuminates, disconnect power at the circuit breaker and have the heater inspected by a qualified electrician.

CAUTION ⚠

CAUTION - DO NOT CONTINUE TO ATTEMPT TO USE THE HEATER IF THE SAFETY CONTROL REPEATEDLY OPERATES AFTER BEING RESET. TO DO SO COULD PERMANENTLY DAMAGE THE HEATER OR CREATE A FIRE OR SAFETY HAZARD.

Special Note: In addition to the over-temperature safety control, this heater is provided with a back-up thermal fuse (one shot) that will permanently shut the heater off if for some reason the over-temperature safety control should not function as intended. If this thermal fuse activates, the heater will not reset and must be repaired by a uualified repair person.

MAINTENANCE INSTRUCTIONS

It is important to keep this heater clean. Your heater will give you years of service and comfort with only minimum care. To assure efficient operation follow the simple instructions below.

⚠ WARNING ⚠

ALL SERVICING BEYOND SIMPLE CLEANING THAT REQUIRES DISASSEMBLY SHOULD BE PERFORMED BY QUALIFIED SERVICE PERSONNEL.

⚠ WARNING ⚠

TO REDUCE RISK OF FIRE AND ELECTRIC SHOCK OR INJURY, DISCONNECT ALL POWER COMING TO HEATER AT MAIN SERVICE PANEL AND CHECK THAT THE ELEMENT IS COOL BEFORE SERVICING OR PERFORMING MAINTENANCE.

User Cleaning Instructions:

1. After the heater has cooled, a vacuum cleaner with brush attachment may be used to remove dust and lint from exterior surfaces of the heater including the grille openings.
2. With a damp cloth, wipe dust and lint from grille and exterior surfaces.
3. Return power to heater and check to make sure it is operating properly.

Maintenance Cleaning Instructions:

(To be performed only by Qualified Service Personnel)

At least annually, the heater should be cleaned and serviced by a qualified service person to assure safe and efficient operation. This should include the removal of the grille and, as necessary the heater from the backbox to clean residue from the unit. After completing the cleaning and servicing, the heater should be fully reassembled and checked for proper operation.

Replacement Parts

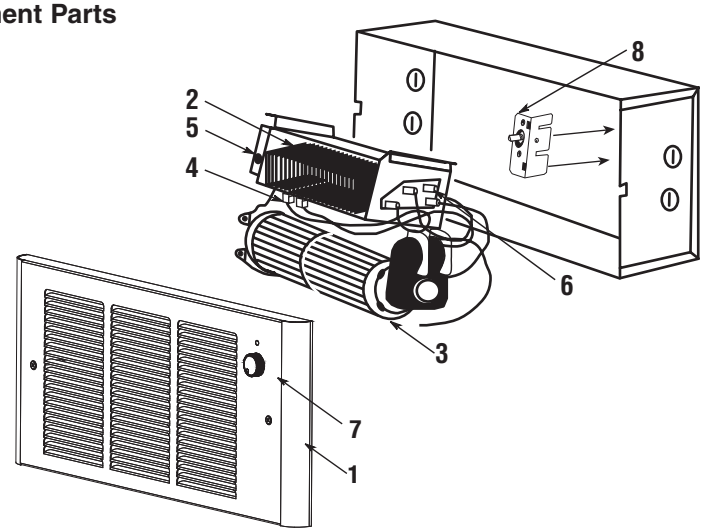

Key No.	Description	Part Number		
		R1500FC & R1500T2FC	R2004FC & R2004T2FC	R2404FC & R2404T2FC
1	Grille	2501-11031-000	2501-11031-000	2501-11031-000
2	Element	302023802	302023805	302023809
3	Blower Assembly	1225-2000-000	1225-2001-001	1225-2002-001
4	Wattage Board	1249-2005-000	1249-2005-000	1249-2005-000
5	Light	3510-2010-000	3510-2010-001	3510-2010-001
6	High Limit	4520-2025-000	4520-2025-000	4520-2025-001
7	Knob	3301-11015-002	3301-11015-002	3301-11015-002
8	Thermostat (Double Pole)	410130001	410130001	410130001
	Thermostat (Single Pole)	410129001	410129001	410129001
9	Limit Control (Self-Hold) Not Shown	4520-11010-000	4520-11010-001	4520-11010-001

LIMITED WARRANTY

All products manufactured by Marley Engineered Products are warranted against defects in workmanship and materials for one year from date of installation, except heating elements which are warranted against defects in workmanship and materials for five years from date of installation. This warranty does not apply to damage from accident, misuse, or alteration; nor where the connected voltage is more than 5% above the nameplate voltage; nor to equipment improperly installed or wired or maintained in violation of the product's installation instructions. All claims for warranty work must be accompanied by proof of the date of installation.

The customer shall be responsible for all costs incurred in the removal or reinstallation of products, including labor costs, and shipping costs incurred to return products to Marley Engineered Products Service Center. Within the limitations of this warranty, inoperative units should be returned to the nearest Marley authorized service center or the Marley Engineered Products Service Center, and we will repair or replace, at our option, at no charge to you with return freight paid by Marley. It is agreed that such repair or replacement is the exclusive remedy available from Marley Engineered Products.

THE ABOVE WARRANTIES ARE IN LIEU OF ALL OTHER WARRANTIES EXPRESSED OR IMPLIED, AND ALL IMPLIED WARRANTIES OF MERCHANTABILITY AND FITNESS FOR A PARTICULAR PURPOSE WHICH EXCEED THE AFORESAID EXPRESSED WARRANTIES ARE HEREBY DISCLAIMED AND EXCLUDED FROM THIS AGREEMENT. MARLEY ENGINEERED PRODUCTS SHALL NOT BE LIABLE FOR CONSEQUENTIAL DAMAGES ARISING WITH RESPECT TO THE PRODUCT, WHETHER BASED UPON NEGLIGENCE, TORT, STRICT LIABILITY, OR CONTRACT.

Some states do not allow the exclusion or limitation of incidental or consequential damages, so the above exclusion or limitation may not apply to you. This warranty gives you specific legal rights, and you may also have other rights which vary from state to state.

For the address of your nearest authorized service center, contact Marley Engineered Products in Bennettsville, SC, at 1-800-642-4328. Merchandise returned to the factory must be accompanied by a return authorization and service identification tag, both available from Marley Engineered Products. When requesting return authorization, include all catalog numbers shown on the products.

HOW TO OBTAIN WARRANTY SERVICE AND WARRANTY PARTS PLUS GENERAL INFORMATION

1. Warranty Service or Parts **1-800-642-4328**
2. Purchase Replacement Parts **1-800-654-3545**
3. General Product Information **www.marleymep.com**

Note: When obtaining service always have the following:
1. Model number of the product
2. Date of manufacture
3. Part number or description

Marley® Engineered Products

470 Beauty Spot Rd. East
Bennettsville, SC 29512 USA