BERKO®
A Marley Engineered Products Brand
470 Beauty Spot Rd. E
Bennettsville, SC 29512

SUBMITTAL SHEET
FFCH SERIES
COMMERCIAL DOWNFLOW CEILING HEATER

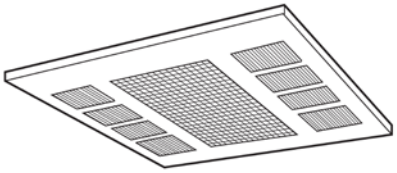

Recessed Mount

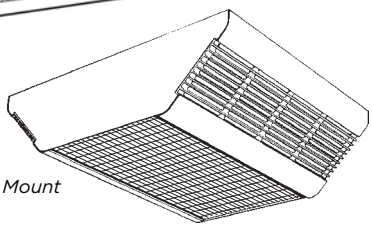

Surface Mount

CAPACITIES
4KW: Field convertible to 3KW or 2KW
5KW: Field convertible to 3.8KW or 2.5KW
208V, 1Ø or 3Ø, 240V, 1Ø or 3Ø 277V, 1Ø Thermostat Range: 45°–90° F Air Movement: 300 CFM

See Selection Chart for all Options

JOB NAME: _____

LOCATION: _____

ARCHITECT: _____

ENGINEER: _____

CONTRACTOR: _____

SUBMITTED BY: _____ DATE: _____

TAG/ITEM	QTY.	CATALOG NUMBER	HEATER			AMPS	CONTROL CKT. VOLTS	MOTOR RPM	AIR FLOW		BUILT-IN CNTRL.
			KW	VOLTS	Ø				CFM	F° RISE	

ACCESSORIES AND CONTROLS	TAG/ITEM	QTY.	CATALOG NUMBER	DESCRIPTION

SUBMITTED BY:	DATE

APPROVED BY:	DATE

ARCHITECT'S AND ENGINEER'S SPECIFICATIONS*

The heating equipment shall include an electric, ceiling-mounted type CDF Series 500 fan-forced air heater suitable for large area heating as manufactured by Berko,® a Marley Engineered Products® Brand, Bennettsville, SC. Heater shall be cULus listed.

The heater shall be designed for surface, recess, or T-Bar mounting. For surface mounting, a Berko FFCHSE surface enclosure shall be used. For T-Bar mounting, a Berko FFCHRE recess enclosure shall be used. For recessed mounting in a permanent ceiling, a Berko FFCHRE recess enclosure and FFCHTK trim kit shall be used.

The heaters shall be factory wired for single-phase operation and field convertible to three-phase operation by removing one jumper wire.

The heaters should be factory wired for full wattage and field convertible to 75% or 50% wattage by the removal of one or two wires respectively.

HEATER SECTION: The heater section shall consist of a 20 gauge steel chassis on which are mounted the heating elements, fan motor and blade, fan control, thermal cutout, and 3-pole contactor. Heater section shall be completely prewired.

HEATER ELEMENTS: The heating elements shall be warrantied for five years and shall be of non-glowing design consisting of 80/20 NiCh resistance wire, enclosed in a steel sheath, to which steel plate fins are brazed. The elements shall cover the entire air intake area to ensure uniform heating of all discharged air.

MOTOR AND CONTROLS: The fan motor shall be impedance-protected, permanently lubricated, and with totally-enclosed rotor. Fan control shall be bi-metallic, snap-action type and shall activate the fan immediately and continue to operate the fan after the thermostat is satisfied and until all heated air has been discharged. Thermal cutout shall be bi-metallic snap-action type designed to automatically shut off the heater in the event of overheating and reactivate the heater when temperature returns to normal.

OPERATIONAL CONTROLS: Thermostat, disconnect switch, and all interlock relays shall be installed within the heater enclosure.

RECESS ENCLOSURE: The back box shall be designed for duty as a recessed rough-in box in masonry, T-Bar, or frame ceiling construction. The back box shall be 20 gauge galvanized steel and shall contain knockouts through which field wiring leads are brought. Enclosures to recess into a maximum 7 inches of ceiling space.

The louvered recess faceplate shall be of 20 gauge cold rolled steel, phosphatized, then electrostatically painted White by a baked enamel process.

SURFACE ENCLOSURE: The surface mounting plate shall be designed for duty as a rough-in box on masonry, T-Bar, or frame ceiling construction. The surface mounting plate shall be 20 gauge galvanized steel and shall contain knockouts through which field wiring leads are brought. Enclosure to extend a maximum of 6 inches into the heated space.

The louvered surface wrapper shall be contoured aluminum extrusion and 20 gauge sheet metal combination with rounded corners. The surface wrapper shall be electrostatically painted Beige or White by a baked enamel process.

**Berko reserves the right to change specifications without prior notice*

Approvals: _____ _____ _____

Models & Specifications:

ITEM INFORMATION			ELECTRICAL DATA					
CATALOG NO.	UPC	MOUNTING	KW	BTU/HR.	AMPS	VOLTS	PHASE	SHIP WT.
FFCH548	685360026527	Heater Section Only	4/3/2	13.7/10.2/6.8	19.2/14.2/9.6	208	1-3	27 lbs
FFCH542	685360026503	Heater Section Only	4/3/2	13.7/10.2/6.8	16.7/12.5/8.3	240	1-3	27 lbs
FFCH547	685360026510	Heater Section Only	4/3/2	13.7/10.2/6.8	14.4/10.8/7.2	277	1	27 lbs
FFCH558	685360026558	Heater Section Only	5/3.8/2.5	17.1/13/8.5	24/18.3/12	208	1-3	27 lbs
FFCH552	685360026534	Heater Section Only	5/3.8/2.5	17.1/13/8.5	20.8/15.8/10.4	240	1-3	27 lbs
FFCH557	685360026541	Heater Section Only	5/3.8/2.5	17.1/13/8.5	18.1/13.7/9	277	1	27 lbs

Models & Specifications – Packaged Options:

ITEM INFORMATION			ELECTRICAL DATA					
CATALOG NO.	UPC	MOUNTING	KW	BTU/HR.	AMPS	VOLTS	PHASE	SHIP WT.
FFCH542RE	685360186054	Recessed Mount	4/3/2	13.7/10.2/6.8	16.7/12.5/8.3	240	1–3	37 lbs
FFCH542SE	685360186061	Surface Mount	4/3/2	13.7/10.2/6.8	16.7/12.5/8.3	240	1–3	27 lbs
FFCH547RE	685360174341	Recessed Mount	4/3/2	13.7/10.2/6.8	14.4/10.8/7.2	277	1	37 lbs
FFCH547SE	685360174358	Surface Mount	4/3/2	13.7/10.2/6.8	14.4/10.8/7.2	277	1	27 lbs
FFCH548RE	685360174303	Recessed Mount	4/3/2	13.7/10.2/6.8	19.2/14.2/9.6	208	1–3	37 lbs
FFCH548SE	685360174310	Surface Mount	4/3/2	13.7/10.2/6.8	19.2/14.2/9.6	208	1–3	27 lbs
FFCH552RE	685360174389	Recessed Mount	5/3.8/2.5	17.1/13/8.5	20.8/15.8/10.4	240	1–3	37 lbs
FFCH552SE	685360174396	Surface Mount	5/3.8/2.5	17.1/13/8.5	20.8/15.8/10.4	240	1–3	27 lbs
FFCH557RE	685360174365	Recessed Mount	5/3.8/2.5	17.1/13/8.5	18.1/13.7/9	277	1	37 lbs
FFCH557SE	685360174372	Surface Mount	5/3.8/2.5	17.1/13/8.5	18.1/13.7/9	277	1	27 lbs
FFCH558RE	685360174327	Recessed Mount	5/3.8/2.5	17.1/13/8.5	24/18.3/12	208	1–3	37 lbs
FFCH558SE	685360174334	Surface Mount	5/3.8/2.5	17.1/13/8.5	24/18.3/12	208	1–3	27 lbs

NOTE: Factory-wired for highest wattage, field-convertible to lower wattages. Factory-wired 1-PH, field convertible to 3-PH dual-phase units, maximum amp draw is listed. Amperage shown is for single phase.

Optional Accessories – Electronic / Control Options:

CATALOG NO.	UPC	DESCRIPTION	COLOR	SHIP WT.
FFCHT	685360026459	Integral thermostat SPST — Range 45 to 95°F	—	1 lbs
FFCHDS	685360026381	Disconnect Switch (3-Pole) 30 amps, 600 volts, 3Ø, 60 Hz	—	1 lbs
FFCH24R*	685360026473	208/240V Primary Transformer/24V sec. and 24V holding coil control relay	—	1 lbs
FFCHTR7*	685360026480	277V Primary Transformer/24V sec. and 24V holding coil control relay	—	1 lbs

For factory installation of above controls, additional charges apply.
*Optional Power Relays or Integral Thermostats cannot be used when the Transformer Relay Option is chosen
For easy BMS integration, heater, relay, and SmartSeries Plus are needed

Optional Accessories – Mounting Options:

CATALOG NO.	UPC	DESCRIPTION	COLOR	SHIP WT.
FFCHSE	685360026435	Surface-mounted enclosure — to be used with above heater section. 20″ L x 16 ½″ W x 5 ¾″ D	Beige	10 lbs
FFCHRE	685360026404	Recessed-mounted enclosure — to be used with above heater section. 23 ¾″ L x 23 ¾″ W x 7″ D	Beige	18 lbs
FFCHSENW	685360149625	Surface-mounted — to be used with above heater section. 20″ L x 16 ½″ W x 5 ¾″ D	White	10 lbs
FFCHRENW	685360149646	Recessed-mounted — to be used with above heater section. 23 ¾″ L x 23 ¾″ W x 7″ D	White	18 lbs
FFCHTK	685360026466	Trim Ring for mounting on permanent ceiling (cannot be factory installed)	—	1 lbs
FFCHRFK	685360171555	Mounting Bracket Retrofit Kit	—	2.5 lbs

Approvals: _____ _____ _____

Electrical Wiring, Standard Factory Wired Diagram:

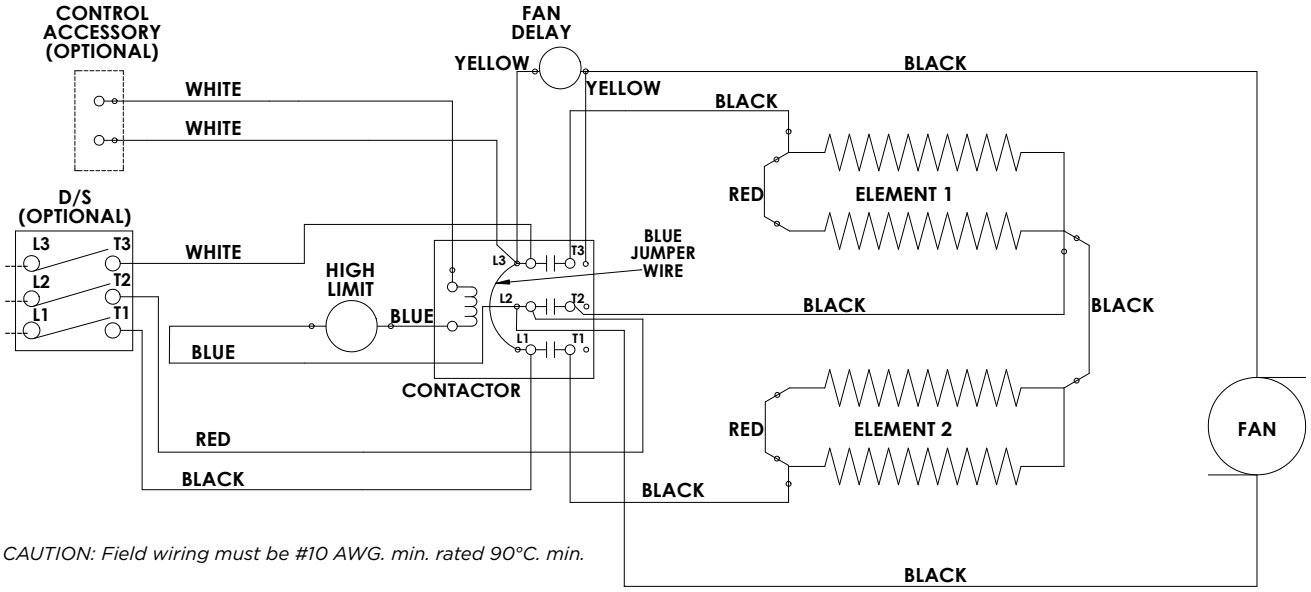

CAUTION: Field wiring must be #10 AWG. min. rated 90°C. min.

Dimensions and Clearances:

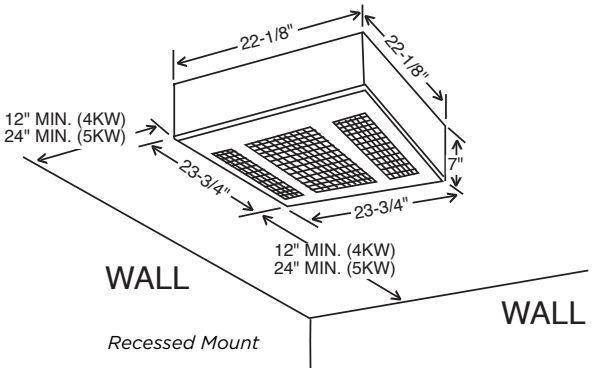

Recessed Mount

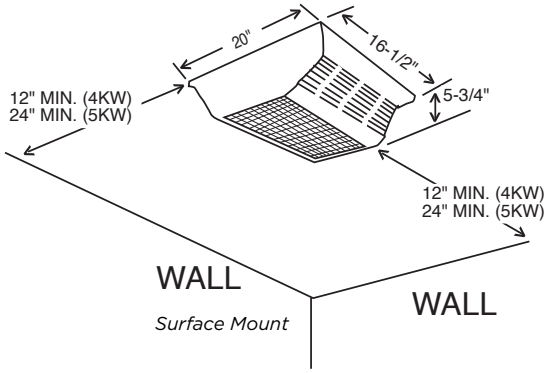

Surface Mount

No matter the industry or application, Marley Engineered Products has a robust portfolio of innovative, reliable, high-performance comfort heating and ventilation solutions for all your heating needs.

For more information or assistance on your next project, contact Technical Services at 800-642-4328

Scan the QR code to access additional specs and features

Approvals: _____ _____ _____