READ THESE INSTRUCTIONS CAREFULLY AND RETAIN FOR FUTURE REFERENCE

Marley Engineered Products

ADDENDUM

For installation of hot water/steam heater coils:
SERIES ACHW/ACHS

Refer to attached Operating Instructions & Parts Manual and all applicable Addenda to Instructions for all unpacking, electrical connections, operating, safety information and maintenance instructions. When ordering parts it is necessary to specify exact model number for which cabinet you are ordering parts.

General recommendations:

1. For hot water heating coils, the hot water supply should be at a lower elevation than the return piping connection.

2. For steam heating coils, the steam supply connection should be at a higher elevation than the return piping connection. This is opposite to the hot water coils. Also, steam coils should fall downward at least 0.125 inch for each foot of coil width (Supply to Return). This is to assure that any condensation will drain out of the coil. **IMPORTANT:** Operating pressure should not exceed 50PSIG. Pressure exceeding 50PSIG may rupture coils.

Refer to TABLE 1 for the standard widths of hot water or steam coils and the respective air curtain cabinet widths that install with it. The slotted holes are supplied with the heater coils to facilitate the attachment of the coils to the air curtain cabinets. The necessary hardware to attach the heater coils to the air curtain cabinets are supplied with the coils. Hardware to mount the units to the supporting structure should be provided by your mechanical contractor.

IMPORTANT: All installation should be done to meet local building codes. Mechanical contractor must insure that all hardware and supporting structure are capable of supporting the combined weight of the units.

NOTES: **(Refer to Figure 1, 2 & 3)**

1. Specific details for all models are not shown. See fig 1 for a typical assembly to identify the major components and the orientations of each vis-à-vis each other as part of the assembly.
2. Same heater coil may be installed for left side or right side supply by just proper re-orientation of the coil. Refer to **Table 1** for the correct connecting pipe sizes and the quantity of parts kit(s) that should come with the width of your coil.
3. When three different air curtains are to be assembled (120” or 132”), the center air curtain must be the correct cabinet size as shown on **Table 1.** Refer also to the *Addendum for Installation of Multiple Unit Air Curtains* (P/N 5200-2416-000).
4. Air curtains are shipped as single units with front panels installed. To remove the front panels, loosen and remove the knurled nuts and put both the nuts and the front panels aside to be re-used later.
5. **Refer to Figure 2** on how the heater coil is secured to the air curtain cabinets. Do not loosen the nut and bolt assembly which hold the front panels and the air curtain cabinets together. These will be used to attach the heater coil to the air curtain cabinet/s. The bolts and hex nuts will pass through the slotted holes of the heater coil. Use the 3/8” lockwashers as spacers and use flat washers with the knurled nuts from note 4 above.
6. When front panels are to be re-installed, **refer to Figure 3.** Do not tighten the nut and bolt sub-assembly on the heater coil side right away. Position the front panel such that the bolts will pass through the holes of the front panel. Mark the locations of the bolts on the heater coil side, remove the front panel and tighten the bolts in place. Re-install the front panels. Use the knurled nuts from the parts bag.

TABLE 1

Heater Coils: Hot Water (ACHW...) or Steam (ACHS...)

Coil Width	No. Rows	Connecting Pipes MPS	Qty Slotted Holes	Air Curtains Combinations	Qty Parts Kits
	1	1.00”			
36”	2	1.25”	12	36”	
	1	1.00”			
38”	2	1.25”	12	38”	
	1	1.00”			
42”	2	1.25”	12	42”	1
	1	1.25”			
48”	2	1.50”	16	48”	
	1	1.25”			
60”	2	1.50”	16	60”	
	1	1.50”			
72”	2	2.00”	24	36” x 36”	
	1	1.50”			
76”	2	2.00”	24	38” x 38”	
	1	1.50”			2
84”	2	2.00”	24	42” x 42”	
	1	1.50”			
96”	2	2.00”	32	48” x 48”	
	1	1.50”			
108”	2	2.00”	36	36” x 36” x 36”	
	1	1.50”			
120”	2	2.00”	40	36” x 48” x 36”	
	1	1.50”			3
132”	2	2.50”	44	48” x 36” x 48”	
	1	1.50”			
144”	2	2.50”	48	48” x 48” x 48”	
	1	1.50”			
168”	2	2.50”	48	42” x 42” x 42”x42	4

Contents of Parts Kit

Item	Description	QTY
1	Bolt, Hex head, #10-24	8
2	Hex nuts, #10	8
3	Round, flat washers	24
4	Split lock washers, 3/8”	8
5	Split lock washers, #10	8
6	Knurled Nut	8

Figure 1: TYPICAL ASSEMBLY (120" Width Shown)

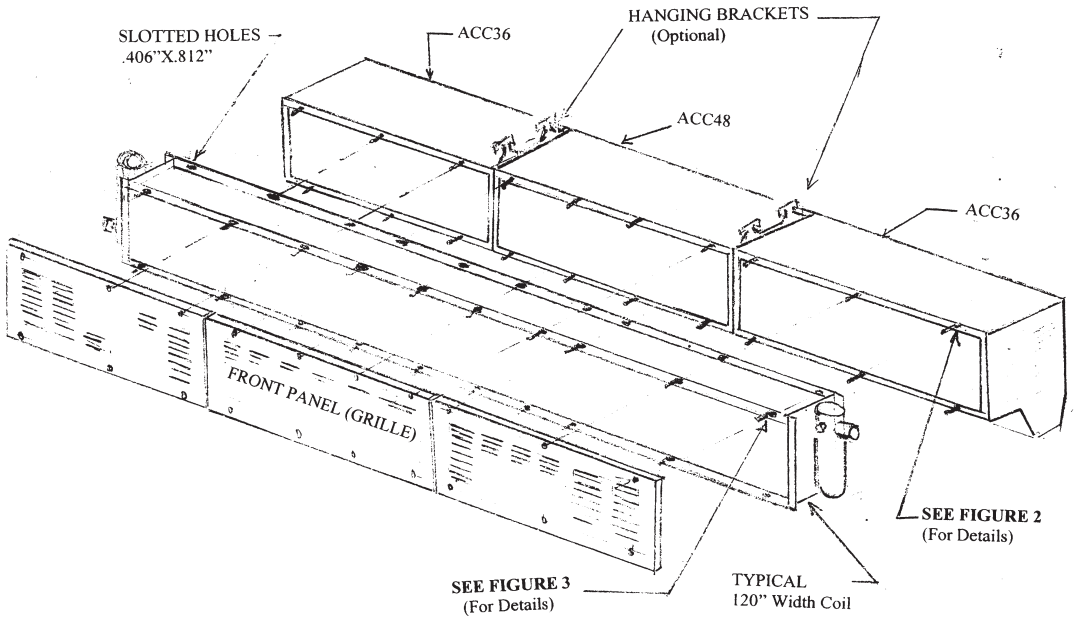

Figure 2: HEATER COIL TO AIR CURTAIN

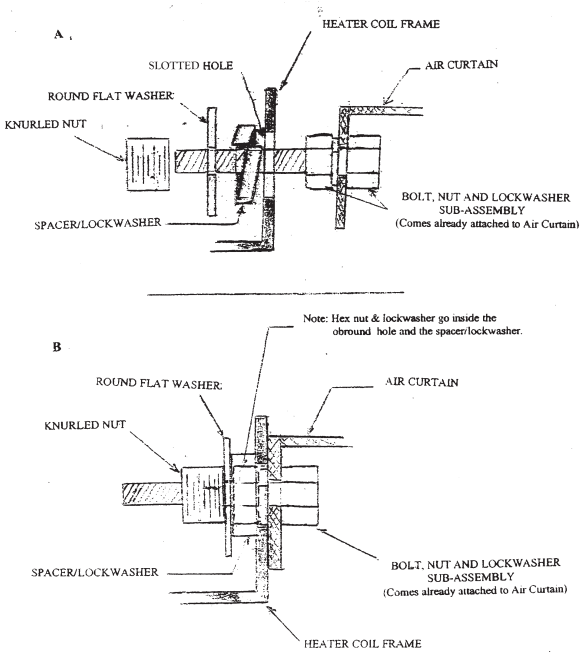

Figure 3: FRONT PANEL TO HEATER

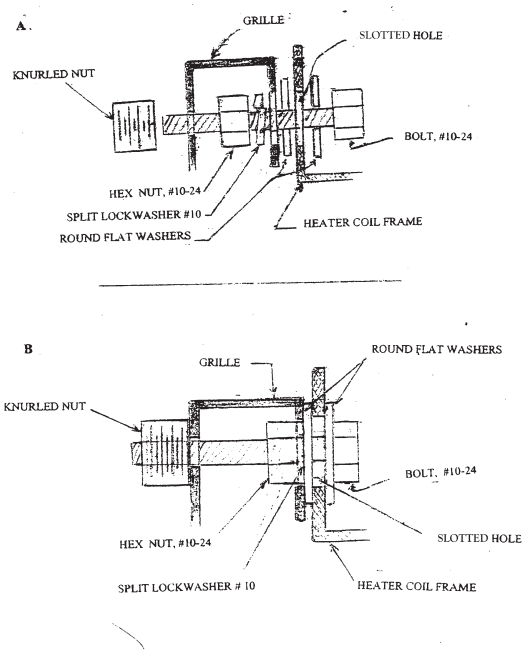

HOW TO ORDER REPAIR PARTS

In order to obtain any needed repair or replacement parts, warranty service or technical information, please contact Marley Engineered Products Service Center toll-free by calling 1-800-642-HEAT.

When ordering repair parts, always give the information listed as follows:

1. The Part Number
2. The Model Number
3. The Part Description
4. Date of Manufacture

Marley
Engineered Products
470 Beauty Spot Rd. East
Bennettsville, SC 29512 USA

Part No.5200-2617-000

PPD021
10/01