LEADING EDGE®
A Marley Engineered Products Brand

Single-Phase Electrically Heated 1/4 HP Air Curtain Series

PROJECT	*ENGINEER*	*CONTRACTOR*	*SHEET OF*
LOCATION	*ARCHITECT*	*DATE*	*DRAWING NO.*

MARK	SINGLE-PHASE HEATED MODEL NUMBER	QTY.	NOZZLE WIDTH (IN)	MOTOR / FAN DATA									APPROX. WEIGHT (LBS)	REMARKS
				HEAT VOLTS SINGLE-PHASE	HEATER INPUT (KW)	BTU/HR SEE CHART	120VOLT MOTORS, HP @ 1725 RPM	NUMBER OF CABINETS	CONTROL VOLTS	MAX VEL (FPM)	AVG VEL (FPM)	AIRFLOW (CFM)		
	E36061125H		36	240	6	20,478	1 @ 1/4	1	24	2500	2000	1620	75	
	E42061125H		42	240	6	20,478	1 @ 1/4	1	24	2500	1900	1795	80	
	E48061125H		48	240	6	20,478	1 @ 1/4	1	24	2500	1855	200	87	
	E36091125H		36	240	9	30,717	1 @ 1/4	1	24	2500	2000	1620	75	
	E42091125H		42	240	9	30,717	1 @ 1/4	1	24	2500	1900	1795	80	
	E48091125H		48	240	9	30,717	1 @ 1/4	1	24	2500	1855	2000	87	

SPECIFICATIONS:

General: Units shall be Leading Edge brand Environmental Series Electrically Heated 1/4 HP Single-Phase Air Curtains.

Approvals: Air Curtains shall meet the requirements of the National Electric Code and shall be Canadian Underwriters Laboratories Listed and Underwriters Laboratories Listed. c UL us.

Cabinet: Shall be all-metal, corrosive resistant, electrostatically applied powder paint coated steel.* Cabinets shall incorporate internal structural supports with keyholes for sufficient strength to provide cabinet rigidity for flush wall mounting. Units to have full-length discharge and flush louvers with 1-inch directional vanes for maximum 40 degree sweep for optimum air-flow adjustment. Cabinet grill shall allow for no tools access to motor/blower assembly. Unit to be supplied with mounting template, operating instructions and parts book.

Electic Heating Coils: Heating element shall be an open helical coil type located directly in the discharge air nozzle for rapid temperature rise. Thermal overload protection shall be provide by an automatic reset switch. Element control panel shall be located in front of nozzle.

Electric Wiring: Air curtain shall incorporate pre-wired, pre-mounted control panel. Panel shall be mounted in front of nozzle for easy access. An On-Off switch and pilot light shall be provided on the control panel front.

Motor: Motor(s) shall be heavy duty totally enclosed permanent split capacitor (PSC) double extended shaft type suitable for continuous duty. Each motor shall be resilient mounted and shall incorporate an automatically resetting thermal overload protector and permanently lubricated rubber-sealed ball bearings. Internal motor power cord shall have quick connect plugs for easy re-moval of blower assembly for cleaning and servicing.

Blower Assembly: Blower wheels and scroll shall be all metal, corrosive-resistant, galvanized steel. Blower wheels shall be direct drive, double inlet, dynamically balanced, forward curved squirrel cage design.

Warranty: Shall be limited for 24 months.

Optional Accessories:

- ☐ On / Off accessories:
  - ☐ Plunger style automatic switch for hinged doors.**
  - ☐ Roller style automatic switch for sliding door.**
- ☐ Mounting Hardware:
  - ☐ Light duty wall bracket for wall mounting from top of unit.
  - ☐ Medium duty wall bracket- for mounting unit up to 12 inches from wall.
  - ☐ Smart-Trac II Adjustable Mounting System- for suspension mount installation.

** Because of the time delay required for elements to heat up, auto switches are not suggested for use with doors that are intermittently open and closed.

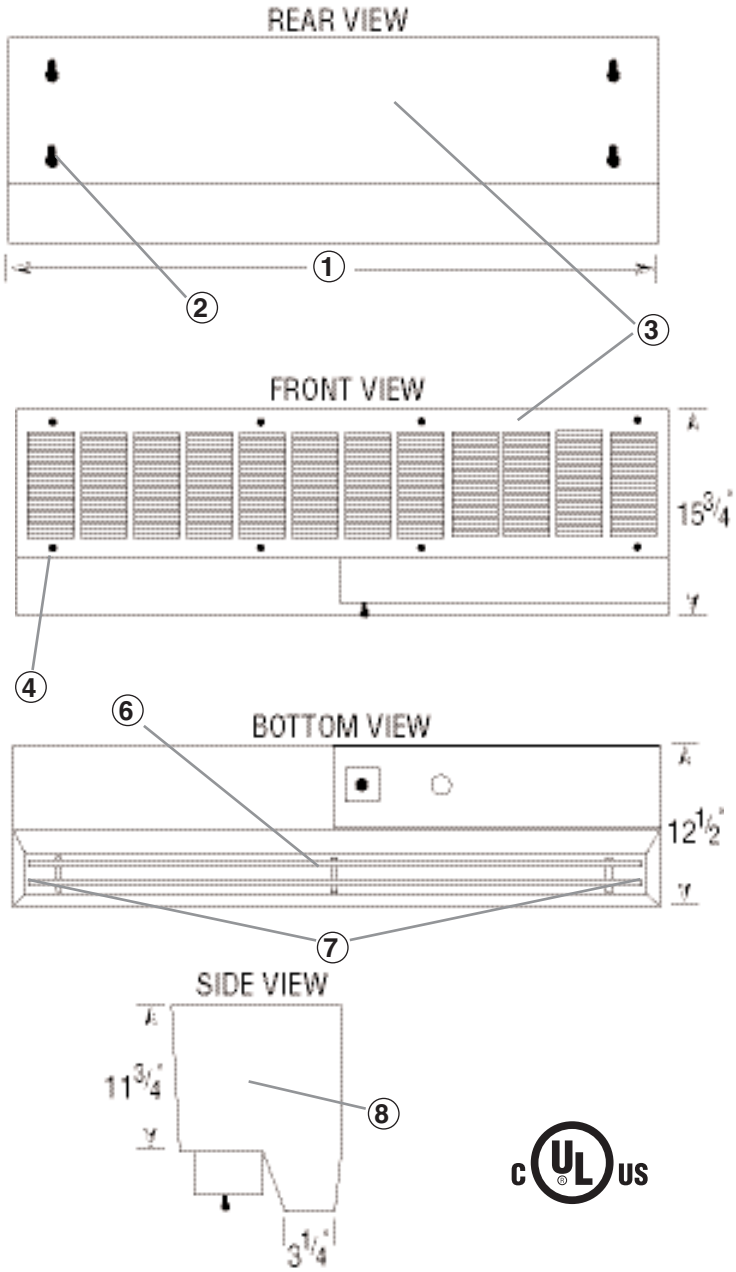

NOTES:

① Refer to individual model number for unit width.

② Keyholes for mounting unit flush to wall accepts 3/8" bolts. Four keyholes are provided per motor. Mounting template is provided with every unit for ease in installation. Mounting hardware and support structure to local code by others.

③ All metal, corrosion-resistant, galvanized steel housing and intake grill, with electrostatically applied epoxy finish over powder primer.

④ Intake grill knurl nuts allow for no tool access to motor/blower assembly for inspection and cleaning.

⑤ Electrical junction box and on-off switch located on standard right hand side. Pilot Light illuminates when unit is evergized.

⑥ Full-length air directional vanes are 1" deep for maximum 40˚ air directional sweep. Unit should be mounted such that the 40˚ sweep of air stream is unobstructed.

⑦ Discharge nozzle extends full width for maximum area coverage and efficiency.

⑧ Complete air curtain unit is cULus listed.

⑨ All dimensions should be field verified.

PROJECT _____ *CONTRACTOR* _____

LOCATION _____ *DATE* _____

ENGINEER _____ *SHEET* _____ *OF* _____

ARCHITECT _____ *DRAWING NUMBER* _____

LEADING EDGE®
A Marley Engineered Products Brand

470 Beauty Spot Road E • Bennettsville, SC 29512 • Phone: (843)479-4006
Fax: (843) 479-8912 • Toll Free 800-452-4179

1/4HP ENVIRONMENTAL ELECTRICALLY HEATED SERIES SINGLE-PHASE