LEADING EDGE®
A Marley Engineered Products Brand

24" Drive-Thru Window Series Air Curtain

PROJECT	*ENGINEER*	*CONTRACTOR*	*SHEET OF*
LOCATION	*ARCHITECT*	*DATE*	*DRAWING NO.*

MARK	QTY.	WIDTH	HEIGHT	MODEL NUMBER	MAX. VEL. (FPM)	AVG. VEL. (FPM)	AVG AIRFLOW (CFM)	NO. OF MOTORS	AMPS	WT. LBS	REMARKS

SPECIFICATIONS:

General: Air curtain unit shall be Leading Edge brand Drive-Thru Window twin 1/15 HP Models.

Cabinet: Unit shall be all-metal, corrosion resistant, galvanized steel housing. The maximum effective width per motor blower assembly shall be no more than 24" and all cabinets shall have structural sidewall supports. Units to have full-length discharge and flush louvers with 1-inch directional vanes for maximum 40˚ sweep for optimum airflow adjustment. Cabinet grill shall allow for no tools access to motor/blower assembly. Electrical junction box shall be mounted on lower right hand side of unit unless otherwise specified.

Motor: Motors shall be heavy duty, 1/15 HP, totally enclosed, permanent split capacitor with each motor shall be resilient mounted and furnished with an automatically resetting Texas Instruments thermal overload and permanently lubricated rubber-sealed ball bearings. Internal motor power cord shall feature quick-disconnect plugs for easy removal of blower base assembly for cleaning and maintenance.

Fan Assembly: Blower wheels and scrolls shall be all metal, corrosion-resistant, galvanized steel. Blower wheels shall be directly driven, double-inlet squirrel cage design.

Mounting: Each unit shall be constructed with keyholes on the rear of the unit for flush wall mounting and supplied with mounting template and an eight-page Operating Instructions and Parts Manual.

Complete Unit: Air Curtain unit shall be UL- or ETL-listed

Optional Accessories:

☐ *Instant On/Off Accessories:*
- ☐ Automatic Door Switches- for instant activation upon door opening.

☐ *Mounting Hardware:*
- ☐ Light duty Wall Bracket- for wall mounting of unit from top of cabinet.
- ☐ Medium duty Wall Bracket- for mounting of unit up to 12 inches from wall.

☐ *Filters:* washable aluminum mesh filters.

☐ *Tamper-Resistant Kit:* prevents unauthorized access to air curtain motor/blower assembly.

REAR VIEW

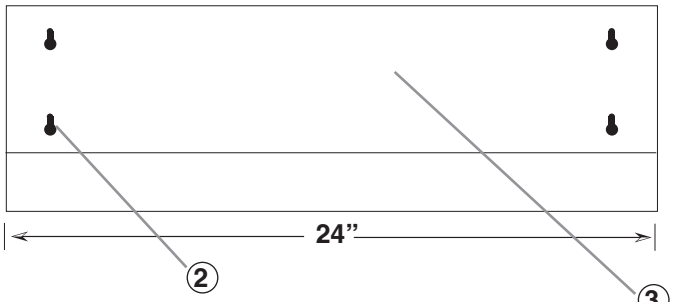

FRONT VIEW

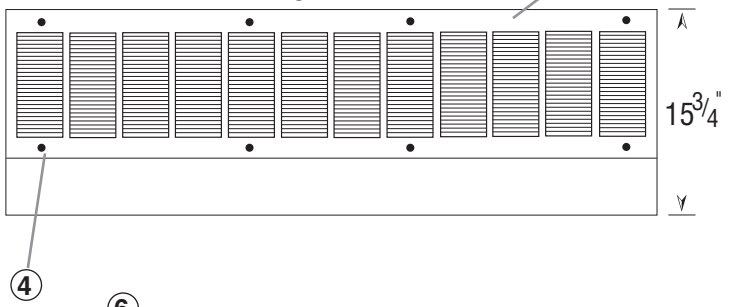

BOTTOM VIEW

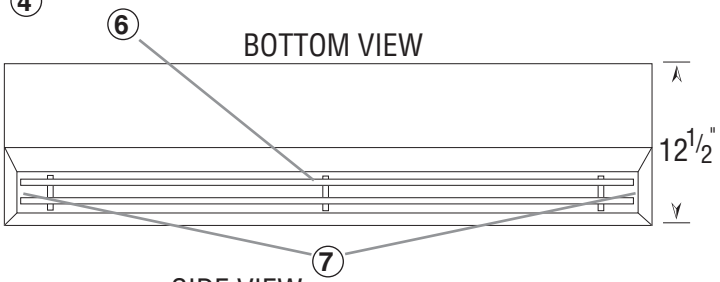

SIDE VIEW

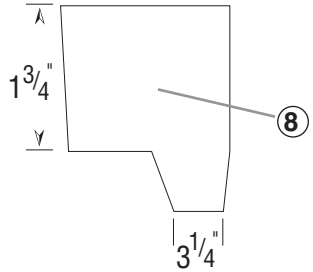

NOTES:

1. Keyholes for mounting unit flush to wall accepts 3/8” bolts. Four keyholes are provided Mounting template is provided with every unit for ease in installation. Mounting hardware and support structure to local code by others.
2. All metal, corrosion-resistant, galvanized steel housing and intake grill, with electrostatically applied epoxy finish over powder primer.
3. Intake grill knurl nuts allow for no tool access to motor/blower assembly for inspection and cleaning.
4. Full-length air directional vanes are 1” deep for maximum 40˚ air directional sweep. Unit should be mounted such that the 40˚ sweep of air stream is unobstructed.
5. Discharge nozzle extends full width for maximum area coverage and efficiency.
6. Complete air curtain unit is UL- or ETL-listed and complies with federal FDA and USDA standards.
7. All dimensions should be field verified.

PROJECT _____ *CONTRACTOR* _____

LOCATION _____ *DATE* _____

ENGINEER _____ *SHEET* _____ *OF* _____

ARCHITECT _____ *DRAWING NUMBER* _____

LEADING EDGE®
A Marley Engineered Products Brand
470 Beauty Spot Road E • Bennettsville, SC 29512 • Phone: (843)479-4006
Fax: (843) 479-8912 • Toll Free 800-452-4179

DRIVE-THRU WINDOW SERIES SUBMITTAL SHEET