Marley
Engineered Products

Drive-Thru Window Unit
24” Air Curtain

OPERATING INSTRUCTIONS & PARTS MANUAL

READ CAREFULLY BEFORE ATTEMPTING TO ASSEMBLE, INSTALL, OPERATE, OR MAINTAIN THE PRODUCT DESCRIBED. PROTECT YOURSELF AND OTHERS BY OBSERVING ALL SAFETY INFORMATION. FAILURE TO COMPLY WITH INSTRUCTIONS COULD RESULT IN PERSONAL INJURY AND/OR PROPERTY DAMAGE!

RETAIN INSTRUCTIONS FOR FUTURE REFERENCE.



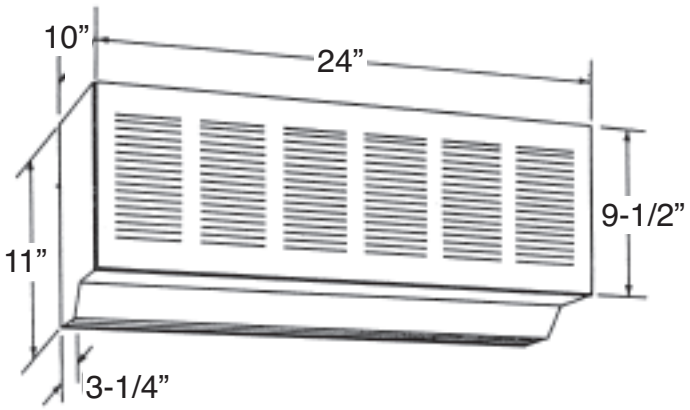

Description

Air curtains produce a wall of continuously flowing air that acts as a thermal barrier against outside air and flying insects. These air curtains maintain interior conditioned temperature and prevent heated or cooled air from escaping through open pass-through locations. When used in restaurants, schools, fast food windows and drive-ins ... air curtains provide protection against insects, dust, odor, fumes, and other contaminant’s. Available in 3 versions, filter only, grill only, and filter and grill. See reverse side.

NOTE

Refer to Environmental Series OIPM for Unpacking, Installation, Operation, Maintenance, General Safety Information and Troubleshooting Chart.

Specifications and Performance

WIDTH	TYPE OF ENTRANCE	MAX. MTG. HEIGHT (NOZZLE TO COUNTER)	RPM	MOTOR WATTS	120V, 60HZ AMPS
24”	SERVICE WINDOW	5’	1550	210	4.0



24" Unit (Filter Only)

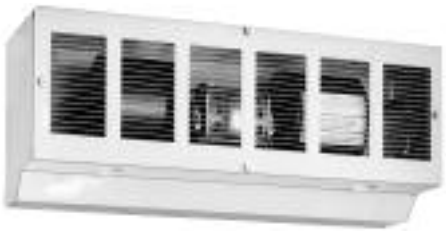

24" Unit (Grill Only)

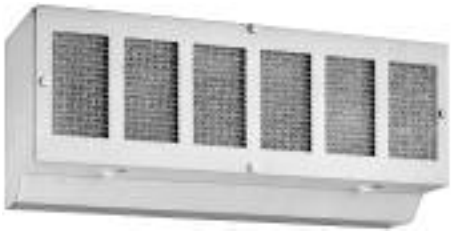

24" Unit (Filter and Grill)

LIMITED WARRANTY

All products manufactured by Marley Engineered Products are warranted against defects in workmanship and materials for five years from date of installation. This warranty does not apply to damage from accident, misuse, or alteration; nor where the connected voltage is more than 5% above the nameplate voltage; nor to equipment improperly installed or wired or maintained in violation of the product's installation instructions. All claims for warranty work must be accompanied by proof of the date of installation.

The customer shall be responsible for all costs incurred in the removal or reinstallation of products, including labor costs, and shipping costs incurred to return products to Marley Engineered Products Service Center. Within the limitations of this warranty, inoperative units should be returned to the nearest Marley authorized service center or the Marley Engineered Products Service Center, and we will repair or replace, at our option, at no charge to you with return freight paid by Marley. It is agreed that such repair or replacement is the exclusive remedy available from Marley Engineered Products.

THE ABOVE WARRANTIES ARE IN LIEU OF ALL OTHER WARRANTIES EXPRESSED OR IMPLIED, AND ALL IMPLIED WARRANTIES OF MERCHANTABILITY AND FITNESS FOR A PARTICULAR PURPOSE WHICH EXCEED THE AFORESAID EXPRESSED WARRANTIES ARE HEREBY DISCLAIMED AND EXCLUDED FROM THIS AGREEMENT. MARLEY ENGINEERED PRODUCTS SHALL NOT BE LIABLE FOR CONSEQUENTIAL DAMAGES ARISING WITH RESPECT TO THE PRODUCT, WHETHER BASED UPON NEGLIGENCE, TORT, STRICT LIABILITY, OR CONTRACT.

Some states do not allow the exclusion or limitation of incidental or consequential damages, so the above exclusion or limitation may not apply to you. This warranty gives you specific legal rights, and you may also have other rights which vary from state to state.

For the address of your nearest authorized service center, contact Marley Engineered Products in Bennettsville, SC, at 1-800-642-4328. Merchandise returned to the factory must be accompanied by a return authorization and service identification tag, both available from Marley Engineered Products. When requesting return authorization, include all catalog numbers shown on the products.

HOW TO ORDER REPAIR PARTS

In order to obtain any needed repair or replacement parts, warranty service or technical information, please contact Marley Engineered Products Service Center toll-free by calling 1-800-642-HEAT.

Marley Engineered Products

470 Beauty Spot Rd. East
Bennettsville, SC 29512 USA