Marley Industrial Products

PROJECT	ENGINEER	SUBMITTED BY
DATE	ARCHITECT	NOTES:
SHEET OF	CONTRACTOR	NOTES:

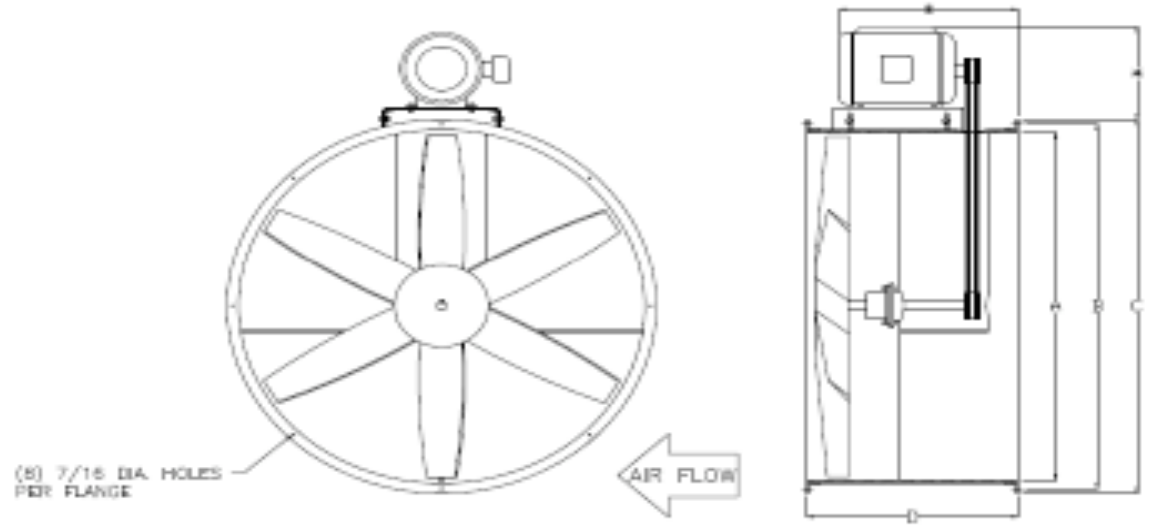

Specifications:

12" to 48" sizes available with 115/230V, 60HZ, 1PH or 230/460V, 60HZ, 3PH open drip proof, totally enclosed or explosion motors.

Non-sparking cast aluminum blades for explosion proof applications.

Motors are standard NEMA design with sealed ball bearings.

Welded construction heavy gauge steel drum with angle iron flanges. Mounting holes (8) in each flange for mounting to duct.

Air tight cylinder in center of drum protects belts, sheaves, and bearings from contaminated air. Completely enclosed sealed bearings with external grease fittings.

Adjustable motor base provides for proper belt tension.

Use for dry air only. Contact factory for wet applications.

SIZE	A	B	C	D	BLADE DIA.
12"	12"	13-1/8"	14"	12"	11-1/4"
15"	15"	16-1/8"	17	12"	14-1/4"
18"	18"	19-1/8"	20"	12"	17-1/4"
24"	24"	25-3/4"	27"	12"/16"	23-1/4"
27"	27"	28-3/4"	30"	16"	26-1/4"
30"	30"	31-3/4"	33"	16"	29-1/4"
34"	34"	35-3/4"	37"	16"	33-1/4"
42"	42"	43-9/16"	45	18"	41-1/4"
48"	48"	49-5/8"	51"	18"	47-1/4"

ACCESSORIES:

12" to 48" duct fan guards and belt guards.

* Dimensions varies with motor.

Note: When ordering, add suffixes as follows:

Open Drip Proof = ODP; Totally Enclosed = TE; Explosion Proof = EXP. One year limited warranry.

ITEM	QTY.	MARK	MODEL NUMBER	FAN SIZE	DUCT DIA.	MOTOR HP	VOLTS	PHASE	MOTOR TYPE ODP / TE / EXP	RPM	CFM @ 0" SP	APPROX. WEIGHT

DFB TUBE AXIAL BELT DRIVE DUCT FAN *SUBMITTAL SHEET*