BERKO®
A Marley Engineered Products Brand
470 Beauty Spot Rd. E
Bennettsville, SC 29512

SUBMITTAL SHEET
CUHS900 SERIES
STOCK CABINET UNIT HEATERS

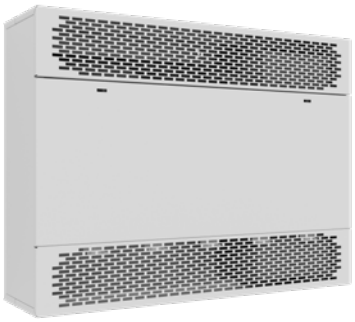

c UL us

CAPACITIES
5–10KW 208, 240 or 480V 1 or 3 Phase Thermostat Range: 55°–85° F Air Movement: 400–1000 CFM

See Selection Chart for all Options

JOB NAME: _____

LOCATION: _____

ARCHITECT: _____

ENGINEER: _____

CONTRACTOR: _____

SUBMITTED BY: _____ DATE: _____

TAG/ITEM	QTY.	CATALOG NUMBER	HEATER			AMPS	AIR FLOW CONFIGURATION	MOUNTING LOCATION
			KW	VOLTS	Ø			

ACCESSORIES AND CONTROLS	TAG/ITEM	QTY.	CATALOG NUMBER	DESCRIPTION

SUBMITTED BY:	DATE

APPROVED BY:	DATE

CUHS900 SERIES

ARCHITECT'S AND ENGINEER'S SPECIFICATIONS*

The electric cabinet unit heaters shall be as manufactured by Berko®, a Marley Engineered Products® Brand. Heaters shall be UL/cUL Listed, designed for mounting in any position, including on-end, fully recessed, semi-recessed or surface mounted. All capacities, voltages, physical sizes should be as specified in the heater schedule. All three phase heaters shall have a balanced heating load. Control voltage is to be internally generated by 24 VAC (Optional 120 VAC).

CABINET: The cabinet shall be of heavy duty cold-rolled steel. The heater front covers shall be securely attached to the cabinet with a maximum of two slotted head style spring latches (optional Toolhead Key Lock) and easily removable for access to elements, filters and control panel. Cabinet shall be finished in Beige (Optional - Color by Architect) polyester powder coated.

HEATING ELEMENTS: The heating elements shall be warranted for five years and shall be of non-glowing design consisting of 80/20 NiChi resistance wire enclosed in a steel sheath to which steel plate fins are brazed. The heating element shall be located directly in front of the blower discharge air for uniform heating.

SAFETY THERMAL CUTOUTS: Thermal safety cutouts shall be built into the system to automatically shut off heater in event of overheating due to any cause. The safety cutouts shall directly interrupt power to the elements and not depend on relays to interrupt the power. (Optional backup manual reset thermal safety cutout in the control circuit shall prevent heater reenergizing until cause of overheating has been cleared by a qualified service technician).

MOTOR AND BLOWER ASSEMBLY: The motor(s) and blower(s) shall be direct drive and resiliently mounted on a rigid heavy duty frame for quiet operation and long life. The motor(s) shall be two speed 1/8 H.P. with automatic reset overload protection. The motor shall be vented and mounted in the air stream to provide maximum cooling of the motor(s). Motor(s) fuse protection shall be provided to meet UL, cUL and NEC requirements. The blower(s) shall be forward curved, double inlet, centrifugal type with discharge directly on the full length of the elements to provide uniform discharge air temperatures.

AIR FILTERS: The filter shall be located ahead of the motor and blower assembly to ensure clean air circulation. The filter shall filter both the returning room or the outside air if the optional outside air damper assembly is provided. Filter shall be easily removed for changing or cleaning by removing the front panel and pulling on the filter. A disposable filter is standard and a permanent washable filter is optional.

FRONT COVER INTERLOCK: Heater shall be provided with an electrical interlock to shut down the heater when the front cover is opened to provide safety to the maintenance personnel during filter cleaning (replacement) or other maintenance.

FAN DELAY CONTROL: Fan control shall delay start up of the fan motor(s) until the heating elements have warmed up. It shall maintain motor operation after heating elements have been de-energized to dissipate residual heat.

TEMPERATURE CONTROL: Thermostat shall be built-in, snap-action single stage with remote bulb sensor located in the return air stream. (Optional - built-in two stage remote bulb snap action thermostat, remote mounted single stage wall thermostat, remote mounted two stage wall Smart Series Plus digital thermostat) Terminals shall be provided in the control panel for direct connection of the remote wall mounted thermostats. Silent time delay relays shall be provided, rather than contactors, to eliminate the noise of contactor opening and closing.

TERMINALS FOR REMOTE INTERLOCK: Terminals shall be provided in the control panel for connection to Building Automation or Energy Management Systems.

HEAT SELECTION/FAN SPEED: Two fan speeds and high-low heat ranges shall be selectable by means of a single rocker switch located behind the front cover.

CIRCUIT BREAKERS: Circuit breakers shall be provided for branch circuit protection where required by UL, cUL and NEC (Optional - Circuit breakers shall be supplied on all heaters).

INTERCHANGEABLE INTAKE AND DISCHARGE LOUVERS: Heater shall be provided with intake louver that can be changed from front to bottom by removing a maximum of two screws. Discharge louvers shall be able to be changed from front to top by removing a maximum of two screws.

**Berko reserves the right to change specifications without prior notice.*

Stock Cabinet Unit Heaters: Models & Specifications:

Convertible Models										
ITEM INFORMATION									DIMENSIONAL DATA	
CATALOG NO.	UPC	WATTAGE (KW)	BTU/HR	FINAL AIR TEMP	CFM		VOLTS/PH.	AMPS	DIM	SHIP WT.
					HI	LO				
CUHS93505203FFW	685360174174	5	17,060	90° F	500	400	208V/3Ø	14	35" W 26 3/8" H 9 7/8" D	120 lbs
CUHS93505203FFWD	685360174181			90° F	500	400	208V/3Ø	14		120 lbs
CUHS93505243FFW	685360174198			90° F	500	400	240V/3Ø	12		120 lbs
CUHS93505243FFWD	685360174204			90° F	500	400	240V/3Ø	12		120 lbs
CUHS93505483FFW	685360174211			90° F	500	400	480V/3Ø	6		120 lbs
CUHS93505483FFWD	685360174228			90° F	500	400	480V/3Ø	6		120 lbs
CUHS94510203FFW	685360174235	10	34,121	90° F	1,000	800	208V/3Ø	34	45" W 26 3/8" H 9 7/8" D	120 lbs
CUHS94510203FFWD	685360174242			90° F	1,000	800	208V/3Ø	34		120 lbs
CUHS94510243FFW	685360174259			90° F	1,000	800	240V/3Ø	15		120 lbs
CUHS94510243FFWD	685360174266			90° F	1,000	800	240V/3Ø	15		120 lbs
CUHS94510483FFW	685360174273			90° F	1,000	800	480V/3Ø	12		120 lbs
CUHS94510483FFWD	685360174280			90° F	1,000	800	480V/3Ø	12		120 lbs

*Factory supplied 208V or 240V, 3PH field convertible to 1 PH, 480V 3 PH convertible to 277V 1 PH, 600V 3 PH convertible to 347V 1 PH. **Amps shown are 3 PH, High heat operation. Field Convertible to 1PH.

Dimensions and Clearances:

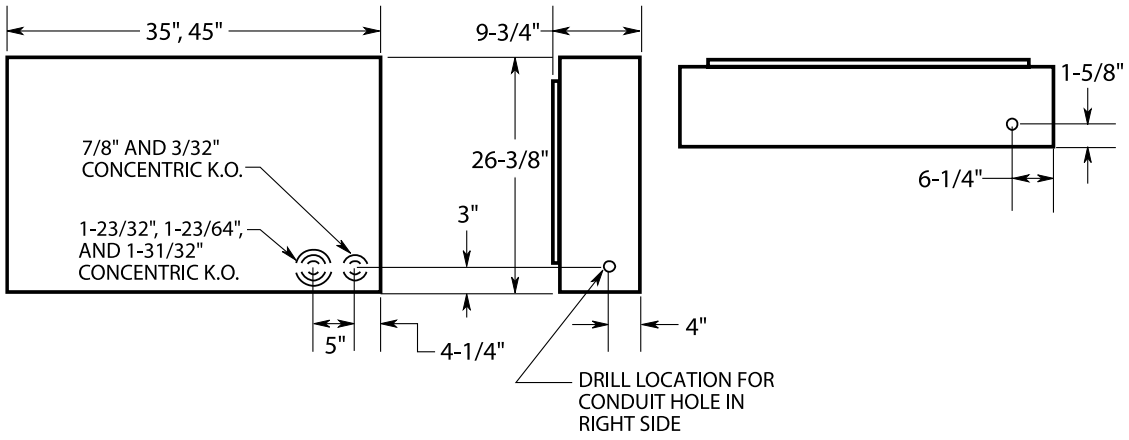

Clearances:

Heater Wall Mounted:

- Front Discharge, No obstruction within 24" of discharge.
- Top Discharge, No obstruction within 24" of discharge.
- Front Intake, Zero or greater to base of heater.
- Bottom Intake, No obstruction within 24" of discharge.

Heater Ceiling Mounted:

- Front Discharge, No obstruction within 24" of discharge.
- Top Discharge, No obstruction within 24" of discharge.
- Front Intake, Zero or greater to base of heater.
- Bottom Intake, No obstruction within 24" of discharge.
- Minimum 2" to side wall.

Approvals: _____ _____ _____

Multiple Air Flow Combinations

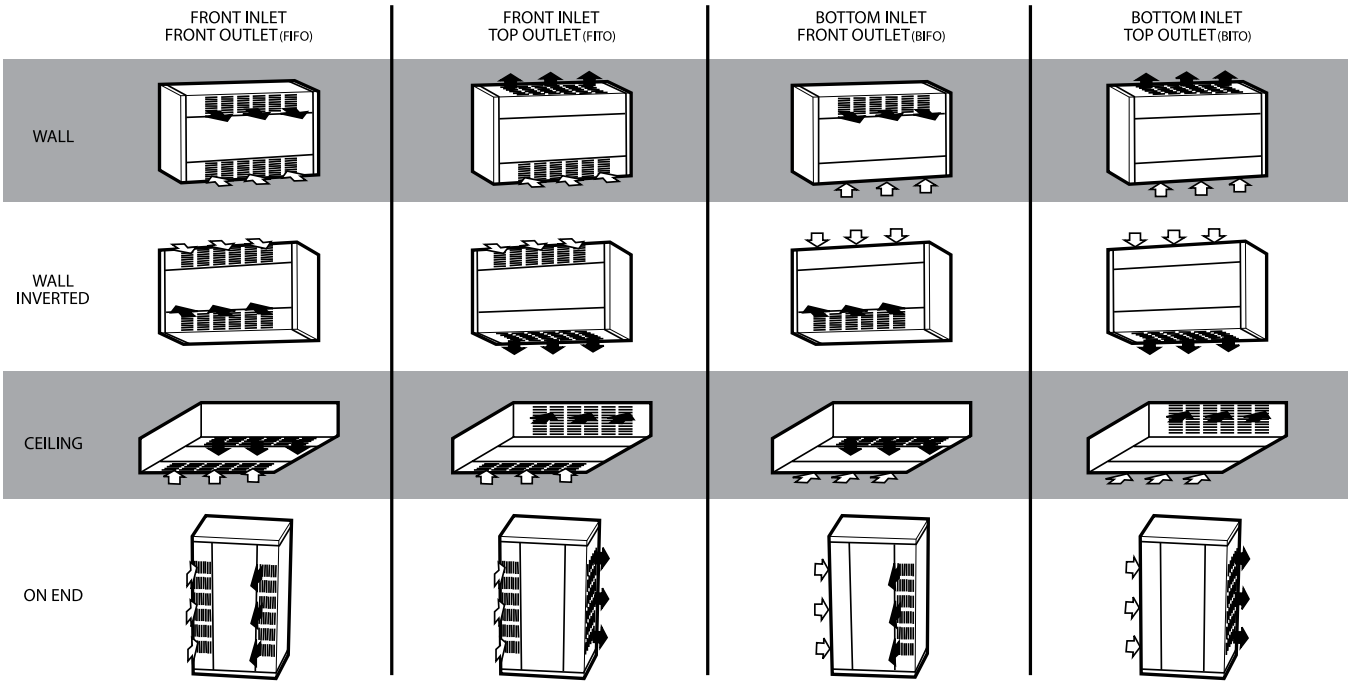

Optional Accessories:

CATALOG NO.	DESCRIPTION	COMPATIBLE WITH	FUNCTION	SHIP WT.
CUH935RTKW	Ceiling or Wall Recess Trim Kit	CUH935	Provides a neat finish to semi-recessed or full recessed application.	3 lbs
CUH945RTKW		CUH945		4 lbs
CUH935BKW	Floor/Toe-Space Base Kit	CUH935	16 gauge, muted black base is recessed from the heater front and sides to provide an attractive and practical floor mounting application.	9 lbs
CUH945BKW		CUH945		10 lbs
CUH935WF	Permanent, Reusable Washable Filter	CUH935	Replaces standard filter Washable filter can be cleaned and replaced.	4 lbs
CUH945WF		CUH945		6 lbs

Standard Accessories – FFW Models:

ACCESSORY	DESCRIPTION
Built-In Thermostat	Built-in single stage thermostat with adjustable knob to have heater run until demand is satisfied.
Manual Reset	Manual Reset over temperature cutout wired into control circuit. Supplied in addition to auto-reset cutout.
Dead Front Disconnect Switch	A three pole non-fused disconnect switch disconnects power to the heater. Design prevents entry into the control compartment until disconnect switch is turned to the OFF position.
Fan/Heat High/Low Switch	Allows user to select whether the heater will run in low mode (2/3 output) or high (full output).
ON/OFF Switch	Allows the user to turn off the unit so it will not run during warm months or when not needed.

Standard Accessories – FFWD Models:

ACCESSORY	DESCRIPTION
SmartSeries® Plus	Built-in two stage thermostat runs 2/3 elements on stage 1 and full heat for stage 2. Fan cycles on high speed only. Comes with BACnet BMS compatibility, scheduling, cooling mode (Fan-Only), and keypad lock.
Manual Reset	Manual Reset over temperature cutout wired into control circuit. Supplied in addition to auto-reset cutout.
Dead Front Disconnect Switch	A three pole non-fused disconnect switch disconnects power to the heater. Design prevents entry into the control compartment until disconnect switch is turned to the OFF position.

No matter the industry or application, Marley Engineered Products has a robust portfolio of innovative, reliable, high-performance comfort heating and ventilation solutions for all your heating needs.

For more information or assistance on your next project, contact Technical Services at 800-642-4328

Scan the QR code to access additional specs and features

Approvals: _____ _____ _____