CUHS900 SERIES
Stock Cabinet Unit Heater



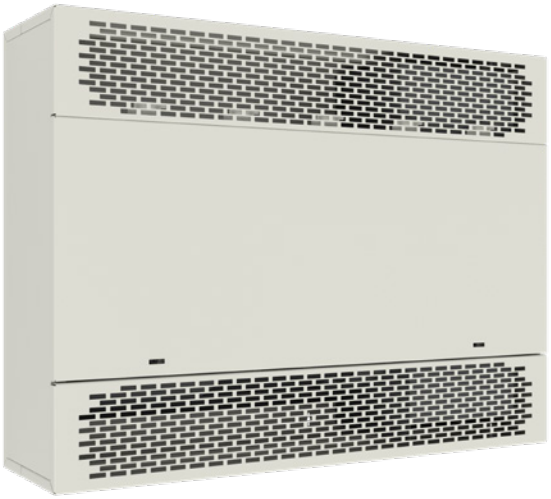

Technical Specifications:

Temp Range: 55°–85°F
CFM: 400–1000

Ideal Spaces:

School Hallways
Churches
Transportation Terminals
Lobbies
Stairwells
Entrance Ways
Vestibule
Mechanical Rooms

White

Contemporary Aesthetics

- Contemporary design to match modern and future architect specifications
- Standard stamped grille with optional ducted grilles

Easy Install and Maintenance

- One-person maintenance on ceiling applications with hinged front panel
- Front cover interlock de-energizes unit when front cover is removed for added safety
- Disposable air filter mounted in inlet air stream; optional permanent and washable aluminum filters available

Robust Design

- Cabinet constructed of heavy 18-gauge cold-rolled steel to provide strength and finished with a polyester powder coating for corrosion resistance
- Motors are mounted with automatic thermal overload protection; motor fuse protection is provided on all heaters to meet safety requirements
- Comes standard with two thermal safety cutouts to automatically shut off and protect the heater in the event of overheating. Reactivates the heater when operating temperature returns to normal

c UL us

5 YEAR WARRANTY ELEMENT

1 YEAR WARRANTY WORKMANSHIP

Stock Cabinet Unit Heaters: Models & Specifications:

Convertible Models											
ITEM INFORMATION										DIMENSIONAL DATA	
	CATALOG NO.	UPC	WATTAGE (KW)	BTU/HR	FINAL AIR TEMP	CFM HI	CFM LO	VOLTS/PH.	AMPS	DIM	SHIP WT.
◆	CUHS93505203FFW	685360174174	5	17,060	90° F	500	400	208V/3Ø	14	35" W 26 ⅜" H 9 ⅞" D	120 lbs
◆	CUHS93505203FFWD	685360174181			90° F	500	400	208V/3Ø	14		120 lbs
◆	CUHS93505243FFW	685360174198			90° F	500	400	240V/3Ø	12		120 lbs
◆	CUHS93505243FFWD	685360174204			90° F	500	400	240V/3Ø	12		120 lbs
◆	CUHS93505483FFW	685360174211			90° F	500	400	480V/3Ø	6		120 lbs
◆	CUHS93505483FFWD	685360174228			90° F	500	400	480V/3Ø	6		120 lbs
◆	CUHS94510203FFW	685360174235	10	34,121	90° F	1,000	800	208V/3Ø	34	45" W 26 ⅜" H 9 ⅞" D	120 lbs
◆	CUHS94510203FFWD	685360174242			90° F	1,000	800	208V/3Ø	34		120 lbs
◆	CUHS94510243FFW	685360174259			90° F	1,000	800	240V/3Ø	15		120 lbs
◆	CUHS94510243FFWD	685360174266			90° F	1,000	800	240V/3Ø	15		120 lbs
◆	CUHS94510483FFW	685360174273			90° F	1,000	800	480V/3Ø	12		120 lbs
◆	CUHS94510483FFWD	685360174280			90° F	1,000	800	480V/3Ø	12		120 lbs

SKU Legend: ◆ **= Popular Products;** ● **= Extended Offering** (Contact your local Marley Sales Representative for typically associated lead times)

*Factory supplied 208V or 240V, 3PH field convertible to 1 PH, 480V 3 PH convertible to 277V 1 PH, 600V 3 PH convertible to 347V 1 PH. **Amps shown are 3 PH, High heat operation. Field Convertible to 1PH.

Dimensions and Clearances:

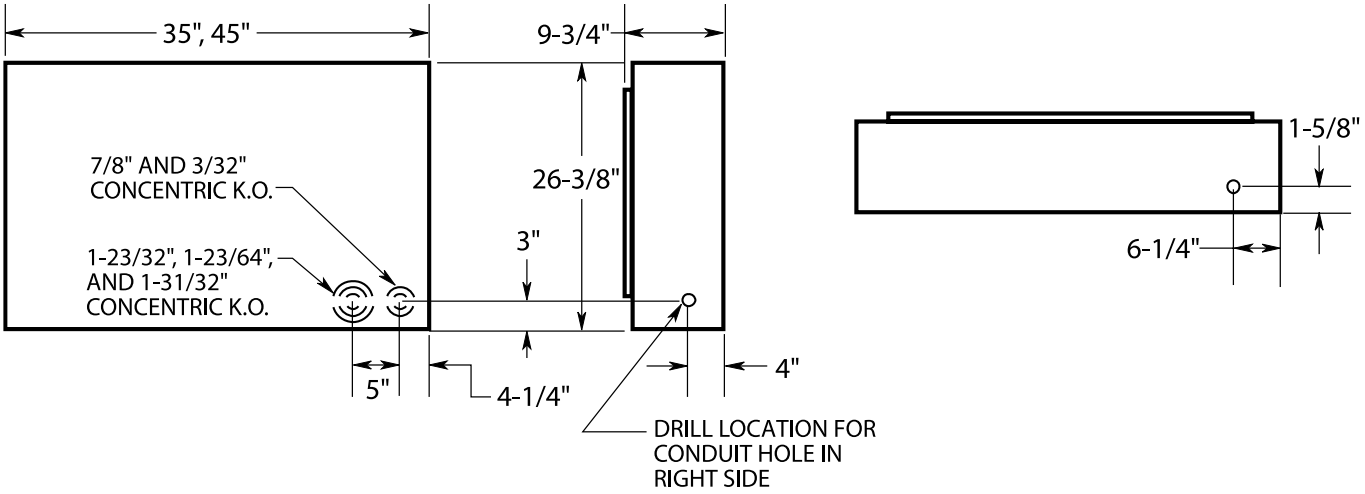

Multiple Air Flow Combinations

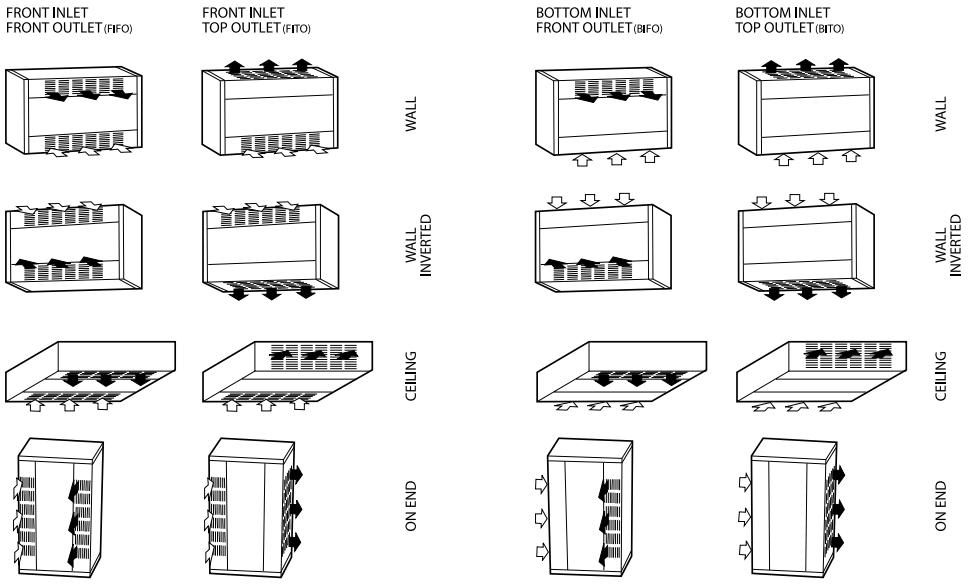

Suggested Controls



Now compatible with SmartSeries® Plus when used with 24VAC control transformer!

CUHS900 SERIES
Stock Cabinet Unit Heater

Scan the QR code to access additional specs and features

Optional Accessories:

CATALOG NO.	DESCRIPTION	COMPATIBLE WITH	FUNCTION	SHIP WT.
CUH935RTKW	Ceiling or Wall Recess Trim Kit	CUH935	Provides a neat finish to semi-recessed or full recessed application.	3 lbs
CUH945RTKW		CUH945		4 lbs
CUH935BKW	Floor/Toe-Space Base Kit	CUH935	16 gauge, muted black base is recessed from the heater front and sides to provide an attractive and practical floor mounting application.	9 lbs
CUH945BKW		CUH945		10 lbs
CUH935WF	Permanent, Reusable Washable Filter	CUH935	Replaces standard filter Washable filter can be cleaned and replaced.	4 lbs
CUH945WF		CUH945		6 lbs

Standard Accessories – FFW Models:

ACCESSORY	DESCRIPTION
Built-In Thermostat	Built-in single stage thermostat with adjustable knob to have heater run until demand is satisfied.
Manual Reset	Manual Reset over temperature cutout wired into control circuit. Supplied in addition to auto-reset cutout.
Dead Front Disconnect Switch	A three pole non-fused disconnect switch disconnects power to the heater. Design prevents entry into the control compartment until disconnect switch is turned to the OFF position.
Fan/Heat High/Low Switch	Allows user to select whether the heater will run in low mode (2/3 output) or high (full output).
ON/OFF Switch	Allows the user to turn off the unit so it will not run during warm months or when not needed.

Standard Accessories – FFWD Models:

ACCESSORY	DESCRIPTION
SmartSeries® Plus	Built-in two stage thermostat runs 2/3 elements on stage 1 and full heat for stage 2. Fan cycles on high speed only. Comes with BACnet BMS compatibility, scheduling, cooling mode (Fan-Only), and keypad lock.
Manual Reset	Manual Reset over temperature cutout wired into control circuit. Supplied in addition to auto-reset cutout.
Dead Front Disconnect Switch	A three pole non-fused disconnect switch disconnects power to the heater. Design prevents entry into the control compartment until disconnect switch is turned to the OFF position.