CU900 SERIES
CUSTOM CABINET UNIT HEATER



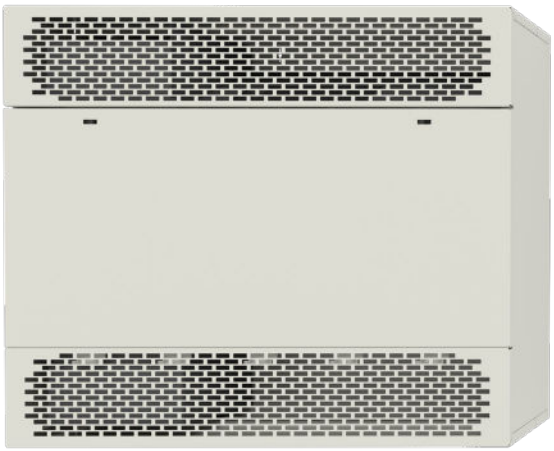

IDEAL SPACES

- School Hallways
- Churches
- Transportation Terminals
- Stairwells
- Entrance Ways
- Vestibules
- Lobbies
- Mechanical Rooms

STANDARD COLOR

- White

ADDITIONAL COLORS

- Beige
- Aluminum
- Bronze
- Black

Custom Colors also available

DIMENSIONS

- 26-3/8"H x 9-3/4"D (length varies)

TEMP RANGE

- 55°– 85°F

CFM

- 200 – 1000

c UL us

5 YEAR WARRANTY ELEMENT

3 YEAR WARRANTY WORKMANSHIP

Contemporary Aesthetics

- Contemporary design to match modern and future architect specifications
- Standard stamped grille with optional ducted grilles

Easy Install and Maintenance

- One-person maintenance on ceiling applications with hinged front panel
- Front cover interlock de-energizes unit when front cover is removed for added safety
- Disposable air filter mounted in inlet air stream; optional permanent and washable aluminum filters available

Robust Design

- Cabinet constructed of heavy 16-gauge cold-rolled steel to provide strength and finished with a polyester powder coating for corrosion resistance
- Motors are mounted with automatic thermal overload protection; motor fuse protection is provided on all heaters to meet safety requirements
- Comes standard with two thermal safety cutouts to automatically shut off and protect the heater in the event of overheating. Automatic thermal limit reactivates the heater when operating temperature returns to normal. Manual reset limit requires unit to be powered down and inspected before operation can resume.

*Optional feature. Contact sales representative or factory regarding optional features available, including: inlet and discharge duct collars; dead-front and fused dead-front disconnect switches; and trim kits. See page 39 to find out how to order cabinet unit heaters.

CU900 SERIES
CUSTOM CABINET UNIT HEATER

Custom Cabinet Unit Heaters: Custom Models and Specifications

SERIES	KW	BTU/HR	FINAL AIR TEMP	CFM*	208 1 PH 60 HZ	208 3 PH 60 HZ	240 1 PH 60 HZ	240 3 PH 60 HZ	277 1 PH 60 HZ	480 3 PH 60 HZ
CU935 35 in. (L) 120 LBS.	2	6,826	85	250	10	6	9	6	8	3
	3	10,239	98		15	9	13	8	12	4
	4	13,652	111		20	12	17	10	15	6
	5	17,065	123		25	15	22	13	19	7
	6	20,478	136		30	17	26	15	22	8
	7	23,891	148		34	20	30	18	26	9
	8	27,304	161		39	23	34	20	30	10
CU945 45 in. (L) 160 LBS.	4	13,652	85	500	20	12	18	11	16	6
	6	27,478	98		30	18	26	16	23	8
	8	27,304	111		40	23	34	20	30	11
	10	34,130	123		48	29	43	25	37	13
	12	40,956	136		59	34	51	30	44	16
	14	47,782	148		68	40	59	35	52	18
	16	54,608	161		78	46	68	40	59	20
CU968 68 in. (L) 260 LBS.	15	51,195	123	750	74	44	64	38	56	20
	21	71,673	148		-	60	89	52	78	27
	24	81,912	161		-	69	-	60	-	31
CU978 78 in. (L) 300 LBS.	20	68,260	123	1,000	-	58	86	50	74	26
	24	81,912	136		-	69	-	60	-	31
	28	95,564	148		-	80	-	70	-	36
	32	109,216	161		-	91	-	79	-	41

NOTE: RED numbers represent circuit breakers or fused disconnect required.+Based on 60°F inlet air temperature. *Values shown is high speed.

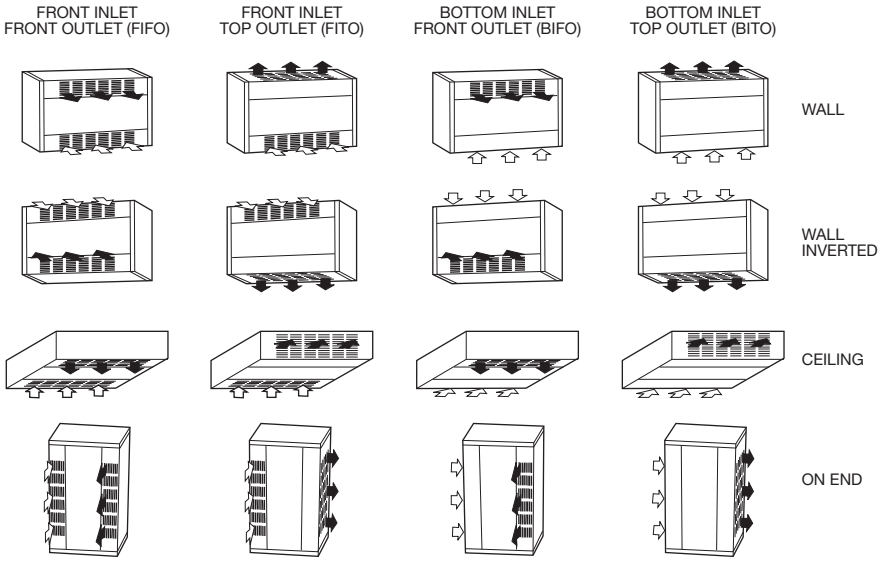

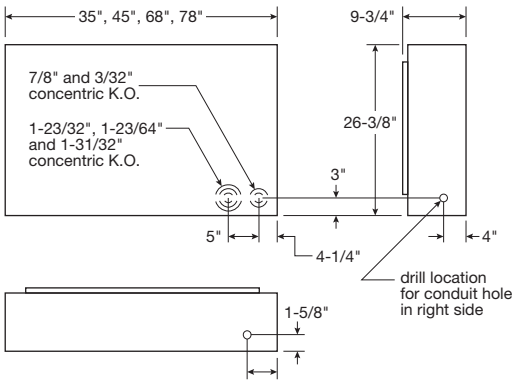

CU900 SERIES
CUSTOM CABINET UNIT HEATER

ACCESSORIES

CATALOG NO.	DESCRIPTION	COMPATIBLE WITH	FUNCTION	SHIP WT. (LBS)
CU935RTK	Ceiling or Wall Recess Trim Kit	CU935	Provides a neat finish to semi–recessed or full recessed application.	3
CU945RTK		CU945		4
CU968RTK		CU968		6
CU978RTK		CU978		7
CU935BK	Floor/Toe–Space Base Kit	CU935	16 gauge, muted black base is recessed from the heater front and sides to provide an attractive and practical floor mounting application.	9
CU945BK		CU945		10
CU968BK		CU968		13
CU978BK		CU978		15
CU935WF	Permanent, Reusable Washable Filter	CU935	Replaces standard filter Washable filter can be cleaned and replaced.	4
CU945WF		CU945		6
CU968WF		CU968		10
CU978WF		CU978		12

OPTIONAL FACTORY-INSTALLED ACCESSORIES

ACCESSORY		DESCRIPTION
2–STAGE THERMOSTAT Built–or Remote	Standard	Built–in (or remote–mounted) single–pole, single–stage thermostat that cycles the element(s) and fan. Fan speed and element wattage selected by the built–in HIGH or LOW selector switch.
	Optional	Built–in (or remote–mounted) two–stage thermostat that cycles 2/3 of the element for during first stage and full heat during second stage. Fan cycles on high speed only.
SMARTSERIES® PLUS (Built–in or Remote)	Optional	Built–in (or remote mounted) two stage thermostat runs 2/3 elements on stage 1 and full heat for stage 2. Fan cycles on high speed only. Comes with BACnet BMS compatibility, scheduling, cooling mode(Fan–Only), and keypad lock.
DEAD FRONT DISCONNECT SWITCH	Standard	Supply terminal block in the control compartment.
	Optional	A three pole non–fused disconnect switch disconnects power to the heater. Design prevents entry into the control compartment until disconnect switch is turned to the OFF position.
DEAD FRONT FUSED DISCONNECT SWITCH†	Standard	Supply terminal block in the control compartment.
	Optional	A three pole non–fused disconnect switch and circuit breaker(s) sized to the heater load protects heater and disconnects power to the heater. Design prevents entry into the control compartment until disconnect switch is turned to the OFF position.
ON/OFF SWITCH	Standard	No switch supplied.
	Optional	Built–in switch provides continuous fan operation with or without heat, or automatic fan cycling as the heat cycles on and off.
KEY LOCK FOR FRONT COVER	Standard	Two (2) slotted head spring latches.
	Optional	Two (2) toolhead key lock style spring latches prevent unauthorized adjustment of controls and provides additional safety from injury due to contact with internal components.
INLET OR DISCHARGE DUCT COLLAR(S)	Standard	Standard Architectural Grilles
	Optional	Collars provide easy connection of field supplied duct work. We do not recommend exceeding 0.2 in. wg external static pressure. Heater with duct collars are supplied with a single speed high static motor.
LOUVER GRILLES	Standard	Standard Architectural Grille.
	Optional	Retrofit option to match the old louver design of the cabinet unit heater. This option is only available for both inlet a nd discharge openings ordered at the same time. Can not be ordered separately.

NOTE: † Plus price of circuit breaker

CU900 SERIES
CUSTOM CABINET UNIT HEATER

HOW TO ORDER

CU	9	35	10	24	1	F	F	1B	0	0	S	0	P	K	P	-	B	B	B

Catalog Prefix:
CU = QMark
CUH = Berko

Series

Catalog Prefix: 35 = 35", 45 = 45", 68 = 68", 78 = 78"

KW: 02, 03, 04, 05, 06, 07,08, 09, 10, 11, 12, 14, 15, 16, 18, 20, 21, 24, 28, 32

Voltage: 20 = 208V, 24 = 240V, 27 = 277V, 48 = 480V* *3–Phase Only

Phase: 1=1Ø, 3=3Ø

Inlet Configuration: F=Front, B=Bottom

Outlet Configuration: F=Front, T=Top

Thermostat: 1B (Single Stage Built In), 1R (Single Stage Remote Wall Mount), 2B (Two Stage Built In), 2R (Two Stage Remote Wall Mount), SB (SmartSeries Plus Built In), SR (SmartSeries Plus Remote)

Internal Control Voltage: 2 (24VAC)

Circuit Breaker Options: C (Circuit Breaker), 0 (None)

Disconnect Switch: 0=Std. None, S=Opt. Disc. Sw., F=Opt. Fused (Circuit Breaker) Disc. Sw.

On–Off Switch: S (Heat On/Off Switch), 0 (None)

Intake Filter: 0=Std. Throw–Away, P=Opt. Washable

Front Cover Lock: 0=Std. Lock, K=Key Lock

Duct Collar/Grille: 0=Standard Architectural Inlet / Standard Architectural Discharge,
I=Duct Inlet / Standard Architectural Discharge,
D=Standard Architectural Inlet / Duct Discharge,
B=Duct Inlet / Duct Discharge
A=Louver Grille Inlet/ Louver Grille Discharge

Cabinet Finish**

Inlet Grille Finish**

Discharge Grille Finish**

****Finish Options**
W (White), N (Beige), A (Aluminum), S (Bronze), B (Black), U (Special Color Request)

SMARTSERIES® PLUS



IDEAL SPACES

- Offices/Conference Rooms
- School Hallways
- Churches
- Transportation Terminals
- Stairwells
- Entrance Ways
- Vestibules
- Lobbies
- Mechanical Rooms

COLOR

- White

DIMENSIONS

- 6-1/32"W x 4-58"H

TEMP RANGE

- 50°– 100°F

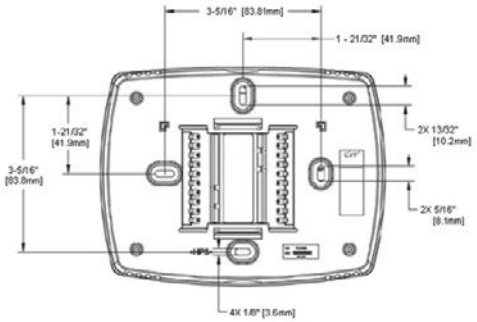



The new SmartSeries Plus is the first digital touchscreen control capable of running a fully programmable internal schedule as well as having the capability to connect to a BACnet Building Management System.

Intelligent Controls for Intelligent Buildings

- This control comes ready to connect to your Building Management System using BACnet MS/TP protocol. With just a few button presses on the digital touchscreen and simple 2 wire connection, you will have full control over your electric heater in no time!

Reduced Operations & Maintenance Time

- Use of BMS saves facility manager time and personnel cost by eliminating the need to travel to the heater site and inspect and diagnose root cause.
- Contains 2 scheduling modes: Setpoint Mode (Heating Mode) and Dual Setpoint Mode (Heating & Cooling, Fan Only). Run the heater only when directed by the internal schedule of the BMS!

Control at your Fingertips

- No BMS? No Problem! You can still get heat when and where you need it by using the built in 7 day programmable scheduling feature.
- Occupancy Settings: Quickly Schedule multiple periods per day, at your desired temperature, for operation based on when you expect occupants to use your space. Comes with 'Copy' function for quick settings of known repeat occupancy periods.

Other Features

- Lockable Key Pad – Protects the unit from unauthorized access and/or tampering giving you peace of mind the heater is running the way you want it to.
- Temperature Override – Control your comfort even further by allowing users to set a temperature above programmed setpoints for up to 4 hours in an unoccupied state.