BK-CRG
Self-Regulating Heating Cable





Technical Specifications:

Temp Range: -40 to 185F

Applications:

Freeze Protection
Roof & Gutter De-Icing
Frost Heave Prevention
Floor Warming
Fire Equipment Freeze Protection
Heat Loss replacement

UL Pipe Heating Cable
Roof and Gutter De-icing

- Self-Regulating Power Output
- Continuous Maintenance Temperature
  - •150°F (65°C) Max
- Maximum Exposure Temperature
  - •185°F (85°C) Max
- Output Wattage (pipe application)
  - •3, 5, 8, & 10 W/FT @ 50°F
  - •10, 16, 26, & 33 W/M @ 10°C
- Output Wattage (roof and gutter)
  - •12 W/FT in snow/ice (32°F)
- Supply Voltage
  - •120, 208-277 VAC
- Size = 1/2" W x 1/4" H
- Minimum Bend Radius = 1 1/8"
- Minimum Install Temperature
  - •-40°F (-40°C)
- Cut to Length and terminate in the field
- Can be overlapped without burnout

BK-CRG
Self-Regulating Heating Cable

Maximum Circuit Lengths per start up temperature and circuit breaker size are shown below. Use local electrical codes to select appropriate branch circuit breakers. Ground Fault circuit breakers are required for heat trace branch circuits – typical minimum trip level is 30mA. Thermal magnetic circuit breakers are recommended to reduce nuisance tripping.

Models & Specifications: Circuit Breaker Sizing

ITEM INFORMATION			MAXIMUM CIRCUIT LENGTH VS BREAKER SIZE & START-UP TEMP FT (M)					
	CATALOG NO.	UPC	START-UP TEMPERATURE DEG F DEG C	15A	20A	30A	40A	SHIP WT.
	BK-CRG03-1		50 (10)	300 (92)	330 (100)	330 (100)	330 (100)	
			0 (-18)	200 (60)	270 (82)	330 (100)	330 (100)	
			-20 (-29)	180 (55)	230 (70)	330 (100)	330 (100)	
	BK-CRG03-2		50 (10)	660 (200)	660 (200)	660 (200)	660 (200)	
			0 (-18)	410 (125)	560 (170)	660 (200)	660 (200)	
			-20 (-29)	360 (110)	480 (146)	660 (200)	660 (200)	
	BK-CRG05-1		50 (10)	230 (70)	270 (82)	270 (82)	270 (82)	
			0 (-18)	150 (45)	200 (60)	270 (82)	270 (82)	
			-20 (-29)	130 (40)	175 (54)	260 (80)	270 (82)	
	BK-CRG05-2		50 (10)	460 (140)	540 (165)	540 (165)	540 (165)	
			0 (-18)	300 (92)	400 (122)	540 (165)	540 (165)	
			-20 (-29)	260 (80)	345 (105)	520 (160)	540 (165)	
	BK-CRG08-1		50 (10)	150 (45)	200 (60)	210 (64)	210 (64)	
			0 (-18)	95 (30)	125 (38)	190 (58)	210 (64)	
			-20 (-29)	85 (26)	100 (31)	170 (52)	210 (64)	
	BK-CRG08-2		50 (10)	295 (90)	390 (119)	420 (128)	420 (128)	
			0 (-18)	195 (60)	250 (76)	375 (115)	420 (128)	
			-20 (-29)	170 (52)	225 (69)	340 (104)	420 (128)	
	BK-CRG10-1		50 (10)	115 (35)	150 (45)	180 (55)	180 (55)	
			0 (-18)	70 (22)	95 (30)	145 (44)	180 (55)	
			-20 (-29)	60 (18)	85 (26)	120 (37)	165 (50)	
	BK-CRG10-2		50 (10)	230 (70)	305 (93)	360 (110)	360 (110)	
			0 (-18)	150 (45)	200 (60)	300 (92)	360 (110)	
			-20 (-29)	130 (40)	175 (54)	260 (80)	360 (110)	

SKU Legend: ◆ **= Popular Products;** ● **= Extended Offering** (Contact your local Marley Sales Representative for typically associated lead times)

NOTE: Circuit lengths shown above are based on trip current characteristics of Type QO and Type QOB devices. For equipment with different trip current characteristics please consult Marley

All Cables require power connection and end seal terminations as a minimum to comply with third party requirements. Marley offers accessories to provide trouble free easy installation and maximum cable circuit life.

Connection Accessories:

MODEL	UPC	DESCRIPTION	SHIP WT.*
PCA-40J		Power Connection	
PCA-40P		Pipe Stand Off Kit	
MEP-PCA-HW		Power Connection Kit - Hot Water Maintenance, no enclosure (end seal not included in kit)	
MEP-ESA-ES		End seal (Hot Water Maintenance)	
MEP-ESA-RG		End Seal (Roof and Gutter)	
MEP-PCA-RG2		Power Connection Kit - Roof & Gutter, no enclosure (end seal included in kit)	
MEP-SPTA-1		Splice/Tee Connection (10/pk)	
MEP-RC-RG		Roof & Gutter - Roof Clips (40/pk)	
MEP-DS-RG		Roof & Gutter - Downspout Hangar (10/pk)	
LESA-1		Light End Seal 120V	
LESA-2		Light End Seal 208-240V	
HTTS-A		Thermostat - Ambient Sense	
HTTS-L		Thermostat - Line Sense	
HTFT-1		Application Tape	
HTAT-1		Aluminum Foil Tape	
HTPS-6		6 inch Pipe Strap	
HTPS-10		10 inch Pipe Strap	
BK-HTCL-1		Caution Label (10/pk)	

All Cables require power connection and end seal terminations as a minimum to comply with third party requirements. Marley offers accessories to provide trouble free easy installation and maximum cable circuit life..

BK-CRG
Self-Regulating Heating Cable

Construction:

A. 16 AWG Nickel Plated Copper Buss Wires
B. Radiation Cross Linked Polymer Heater Core
C. Flame Retardant, UV Stabilized Polyolefin Jacket
D. Tinned Copper Braid
E. Modified Polyolefin Outer Jacket
   - •UV Stabilized
   - •Flame Retardant
   - •Protects Cable against aqueous inorganic Chemicals

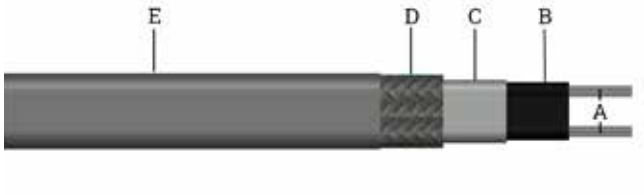

Power Output Curves:

Power Output Curves shown below apply to cables used at service voltages shown below on insulated metal pipes. For Plastic pipe installation derate cable power output by 35% and use aluminum tape installation method. For other applications contact Marley.

POWER ADJUSTMENT FACTOR		
MODEL	208 VOLTS	277 VOLTS
BK-CRG03-2	0.75	1.28
BK-CRG05-2	0.86	1.16
BK-CRG08-2	0.91	1.1
BK-CRG10-2	0.93	1.08

Power Output Curves - BK-CRG Series

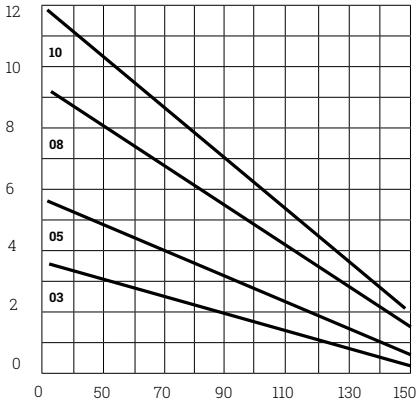

Product Ordering Information:

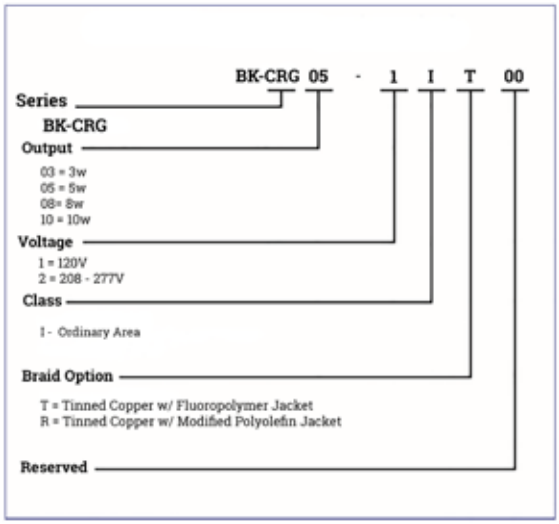

Note = BK-CRG 5 w/ft cable 12 w/ft in snow and ice recommended for roof and gutter de-icing applications

ORDERING INFORMATION				
OUTPUT W/FT	VOLTS	MODEL	STOCK	LBS/ 1000'
3 W/FT @ 50F	120	BK-CRG03-11R00	S	80
		BK-CRG03-11T00	S	80
	208-277	BK-CRG03-21R00	S	80
		BK-CRG03-21T00	S	80
5 W/FT @ 50F	120	BK-CRG05-11R00	S	80
		BK-CRG05-11T00	S	80
	208-277	BK-CRG05-21R00	S	80
		BK-CRG05-21T00	S	80
8 W/FT @ 50F	120	BK-CRG08-11R00	S	80
		BK-CRG08-11T00	S	80
	208-277	BK-CRG08-21R00	S	80
		BK-CRG08-21T00	S	80
10 W/FT @ 50 F	120	BK-CRG10-11R00	S	80
		BK-CRG10-11T00	S	80
	208-277	BK-CRG10-21R00	S	80
		BK-CRG10-21T00	S	80

Note = To order specify model, length, and connection accessories. Cables are shipped +/- 5% of label, maximum spool length 1000 feet, minimum order is 250 feet. No fee to cut to length between 250 and 1000 feet.