CPL SERIES
Decorative Pedestal Steel Convector



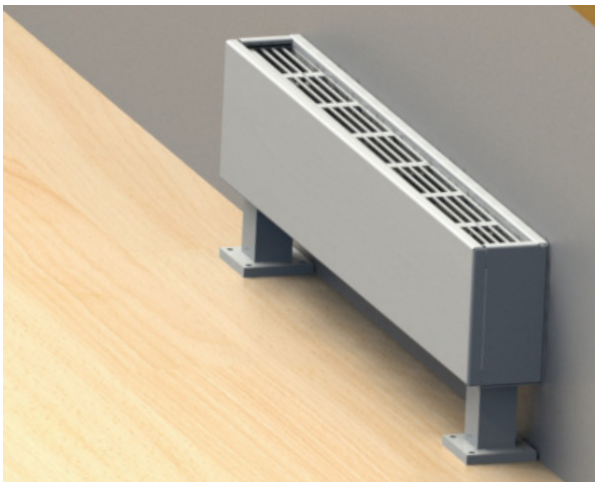

Ideal Spaces:

Offices
Hallways
Lobbies
Retail Spaces
Terminals

Commercial / Institutional Spaces with Floor-to-Ceiling Windows

White | Beige | Charcoal Grey

Bronze | Black | Aluminum

Custom and/or Anodized Colors also Available

- CPL (Decorative) ideal for primary, secondary or supplemental heat where wall mounting is not viable
- Perfect for under-the-window heat loss and condensation prevention
- Durable front cover constructed of 16-gauge steel (optional 14-gauge available)
- Pedestal-mounted design; bottom inlet - top outlet
- Units may contain 1–3 heating elements that yield a broad range of heating capacity (see specifications)
- Optional ¼ in. mesh located under the discharge grille to deter insertion of objects and restriction of airflow
- Blend into any décor with 8 standard color options or custom finishes available upon request
- Units can be mounted from wall-to-wall or as discrete units in standard lengths of 28 in. to 10 ft.
- Optional built-in controls include: line voltage thermostat (SPST or DPST); power on/off switch; power relay; or transformer relay (see specifications)
- Right- or left-hand entry/wiring flexibility with identical pre-wired junction boxes at either end
- End-to-End wire-way provided for ease of wiring; and rated per the NEC conduit size and rating codes. Please consult factory for proper sizing and specifications
- Easy connection of supply wiring from bottom, rear or end, as well as multiple wiring of adjacent heaters from one entry point
- For service, all internal parts are accessible by removing cover

c UL us

5 YEAR WARRANTY ELEMENT

1 YEAR WARRANTY WORKMANSHIP

CPL SERIES
Decorative Pedestal Steel Convector

5 ½" x 3" — Single Element

Lengths

Length	28"	3′	4′	5′	6′	8′	10′
Shipping Weight	11 lbs	15 lbs	18 lbs	25 lbs	29 lbs	38 lbs	47 lbs

NOTE: All models are NON-STOCK, MADE-TO-ORDER. When ordering, specify quantity, catalog number, voltage, wattage, optional controls, and color. Consult sales representative for lead times.

*Watts per Ft.**

125	188
250	

*Specs vary by length. Refer to the submittal sheet for full details.

*Voltages**

120	208	240
277	347	600

7" x 5" — Multiple Elements

Available Length

Length	28"	3′	4′	5′	6′	8′	10′
Shipping Weight	11 lbs	15 lbs	18 lbs	25 lbs	29 lbs	38 lbs	47 lbs

NOTE: All models are NON-STOCK, MADE-TO-ORDER. When ordering, specify quantity, catalog number, voltage, wattage, optional controls, and color. Consult sales representative for lead times.

*Watts per Ft.**

1 Element*	125	188	250
2 Elements*	375	500	
3 Elements*	564	625	750

*Specs vary by length. Refer to the submittal sheet for full details.

*Voltages**

Single Phase*	208	240	277
	347	600	
Three Phase*	208	240	600

Optional Accessories:

	CATALOG NO.	DESCRIPTION	COMPATIBLE WITH	SHIP WT.
BLANK SECTIONS	CPLASBL21	28-Inch Blank Section	CPLAS Heaters	10 lbs
	CPLASBL31	3-Foot Blank Section		13 lbs
	CPLASBL41	4-Foot Blank Section		17 lbs
	CPLASBL51	5 Foot Blank Section		21 lbs
	CPLASBL61	6-Foot Blank Section	CPLAS Heaters	25 lbs
	CPLASBL81	8-Foot Blank Section		32 lbs
	CPLASBL101	10-Foot Blank Section		42 lbs
	CPLAMBL21	28-Inch Blank Section	CPLAM Heaters	14 lbs
	CPLAMBL31	3-Foot Blank Section		18 lbs
	CPLAMBL41	4-Foot Blank Section		24 lbs
	CPLAMBL51	5 Foot Blank Section		30 lbs
	CPLAMBL61	6-Foot Blank Section	CPLAM Heaters	36 lbs
	CPLAMBL81	8-Foot Blank Section		48 lbs
	CPLAMBL101	10-Foot Blank Section		60 lbs
PEDESTAL LEG KITS	CPLASPD2	Pedestal Leg Kit for 2, 3 & 4 ft. units (quantity 3)	Legs must be ordered with CPLAS Heaters/Blanks	3 lbs
	CPLASPD3	Pedestal Leg Kit for 5, 6 & 8 ft. units (quantity 3)		4 lbs
	CPLASPD4	Pedestal Leg Kit for 10 ft. unit (quantity 4)		5 lbs
	CPLAMPD2	Pedestal Leg Kit for 2, 3 & 4 ft. units (quantity 2)	Legs must be ordered with CPLAM Heaters/Blanks	4 lbs
	CPLAMPD3	Pedestal Leg Kit for 5, 6 & 8 ft. units (quantity 3)		5 lbs
	CPLAMPD4	Pedestal Leg Kit for 10 ft. unit (quantity 4)		7 lbs
END CAPS RIGHT	CSLASECR1	Right Hand End Cap	CPLAS/CPLAM Heaters/Blanks	1 lbs
	CSLAMECR1	Right Hand End Cap		1 lbs
END CAPS LEFT	CSLASECL1	Left Hand End Cap	CPLAS/CPLAM Heaters/Blanks	1 lbs
	CSLAMECL1	Left Hand End Cap		1 lbs

All steel convectors come standard with end caps. All pedestal style steel convectors come standard with pedestals. Outlet Mesh: Price per foot. 14-Gauge Front Cover: add 10% to heater price. Standard color included in base price. Other colors available. See paint policy page for information on custom paint colors. If color is not specified, front covers will be Beige. Back, grille, and accessories will be statuary bronze. When ordering, specify heater catalog number, voltage, phase, suffix catalog number for built-in controls, color, and options. Specify color for pedestal legs.

See Convector Heater Controls page for Optional Controls.

CPL SERIES
Decorative Pedestal Steel Convector

Scan the QR code to access additional specs and features

Dimensions and Clearances:

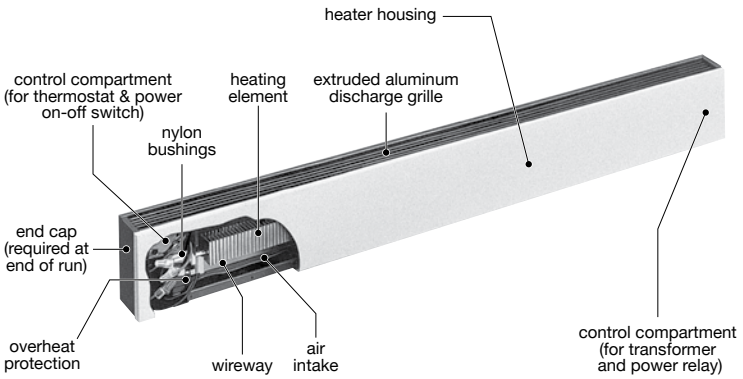

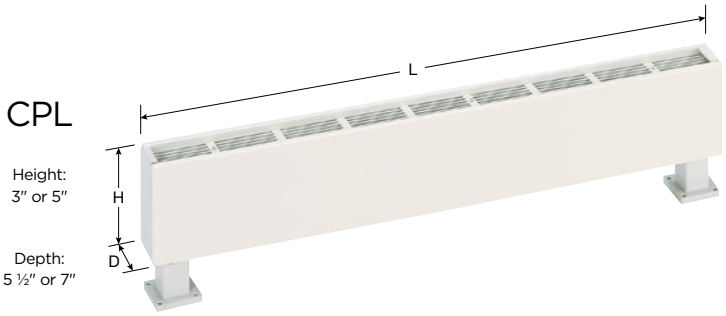

SURFACE MOUNTED

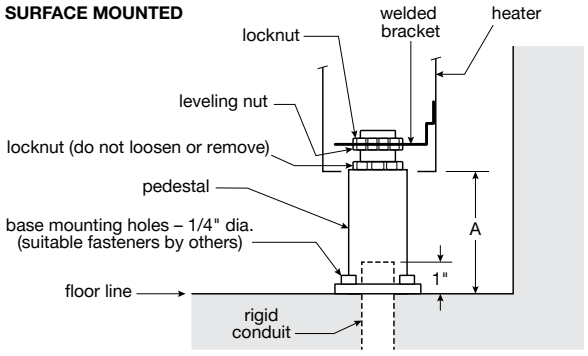

IMBEDDED IN FLOOR

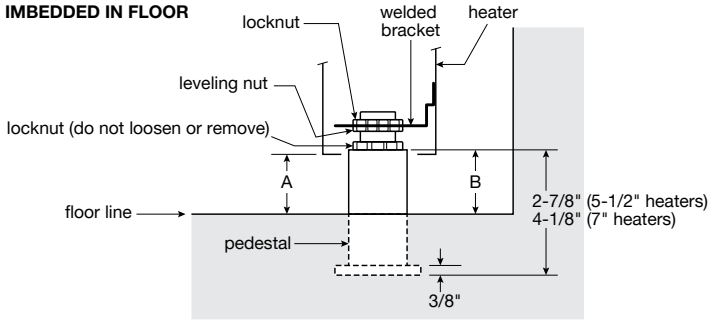

PEDESTAL DETAILS

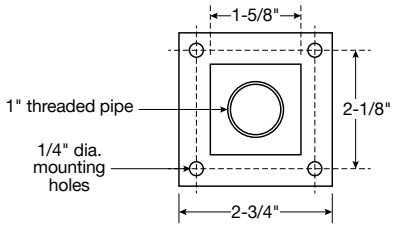

5-1/2 IN. HEATER PEDESTAL

PEDESTAL LOCATION

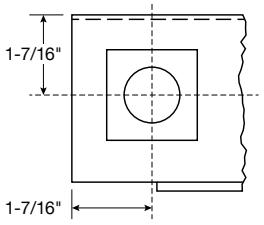

BOTTOM OF 5-1/2 IN. HEATER

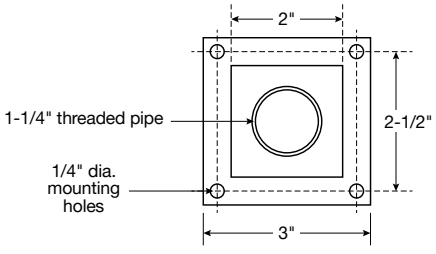

7 IN. HEATER PEDESTAL

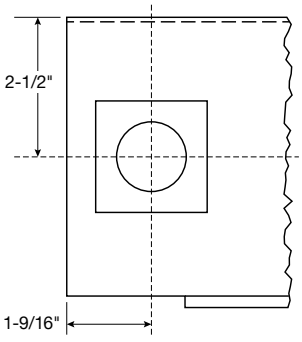

BOTTOM OF 7 IN. HEATER