BERKO®
A Marley Engineered Products Brand
470 Beauty Spot Rd. E
Bennettsville, SC 29512

SUBMITTAL SHEET
THZ SERIES CONTACTOR PANELS
INDUSTRIAL/COMMERCIAL/ RESIDENTIAL CONTROLS



c UL us

CAPACITIES

- Power Supply Voltage: 120-600V, 1 & 3P
- Control Voltage: 24vac, 120V
- NEMA Type 1 and NEMA Type 3R enclosures
- 1-20 Zone Control
- GFI protection

See Selection Chart for all Options

THZ SERIES CONTACTOR PANELS

JOB NAME: _____

LOCATION: _____

ARCHITECT: _____

ENGINEER: _____

CONTRACTOR: _____

SUBMITTED BY: _____ DATE: _____

TAG/ITEM	QTY.	CATALOG NUMBER	# OF ZONES / CIRCUITS	INCOMING VOLTAGE AND PHASE	OUTGOING VOLTAGE AND PHASE	CONTROL VOLTAGE	ENCLOSURE TYPE (1/3R)	GFI (Y/N)

SUBMITTED BY:	DATE

APPROVED BY:	DATE

ARCHITECT'S AND ENGINEER'S SPECIFICATIONS*

CONTACTOR PANELS

THZ Series Contactor Panels shall be supplied Berko®, a Marley Engineered Products® Brand, Bennettsville, SC, USA, and shall be of the voltage, phase, and circuits specified in the schedule. They shall be certified to cULus listed under standard 2021. Berko's Contactor Panels are the most effective method of controlling your Thermazone, Thermazone Thin, and VRP/VRS heaters, among a wide variety of other units as well. Each Contactor Panel model is designed to allow for field designation of one or multiple zones, offering complete customization when controlling heaters individually or in groups. Each 30A or 60A contactor is able to carry one or several heaters. These contactor panels are often partnered with thermostats (simple and smart), but may also be controlled with on/off switches, timers, and other low cycle 24vac and 120vac controllers. Berko's contactor panels are factory wired for quick and efficient installations and offer an affordable solution for every project.

SOLUTION OVERVIEW

- Nema Type 1 standard w/ Type 3R enclosure available, cULus listed and labeled.
- 24vac and 120V Control Voltage available.
- Suitable for smart or standard wall thermostats, timers, on/off switches, and any other low cycle controller.
- Single phase panels available with 30A Contactors in 2, 5, 10 or 20 unit designs. Supply voltage from 120-600V.
- Three phase panels available with 30A or 60A Contactors in 2, 5, 10 or 20 unit designs. Supply voltage from 208-600V.
- All Contactors rated up to 600V.
- Single and multi-zone control capability.
- Nothing to program, all the intelligence is in the low voltage control.
- GFI Protection can be added to all 30A Contactors in the 2C, 5C, or 10C sizes.

Berko reserves the right to change specifications without prior notice.

Approvals: _____ _____ _____

THZ SERIES CONTACTOR PANELS

MODEL #	DESCRIPTION	SUPPLY VOLTAGE	PHASE	DIMENSIONS HXWXD			
				TYPE 1 ENCLOSURE SIZE	TYPE 1 "-GFI" ENCLOSURE SIZE	TYPE 3R "-3R" ENCLOSURE SIZE	TYPE 3R "-3R-GFI" ENCLOSURE SIZE
2-CIRCUIT PANEL							
BR-THZ-S30-2C-0	2 DP Contactors, 30amps each, 24vac control	120-600	1	20"x16"x6"	24"x16"x6"	20"x16"x6"	24"x20"x6"
BR-THZ-S30-2C-1	2 DP Contactors, 30amps each, 120vac control	120-600	1	20"x16"x6"	24"x16"x6"	20"x16"x6"	24"x20"x6"
BR-THZ-T30-2C-0	2 DP Contactors, 30amps each, 24vac control	208-600	3	20"x16"x6"	24"x20"x6"	20"x16"x6"	24"x20"x6"
BR-THZ-T30-2C-1	2 DP Contactors, 30amps each, 120vac control	208-600	3	20"x16"x6"	24"x20"x6"	20"x16"x6"	24"x20"x6"
5-CIRCUIT PANEL							
BR-THZ-S30-5C-0	5 DP Contactors, 30amps each, 24vac control	120-600	1	24"x16"x6"	24"x24"x6"	24"x20"x6"	24"x20"x6"
BR-THZ-S30-5C-1	5 DP Contactors, 30amps each, 120vac control	120-600	1	24"x16"x6"	24"x24"x6"	24"x20"x6"	24"x20"x6"
BR-THZ-T30-5C-0	5 DP Contactors, 30amps each, 24vac control	208-600	3	24"x24"x6"	30"x24"x6"	24"x24"x6"	30"x24"x8"
BR-THZ-T30-5C-1	5 DP Contactors, 30amps each, 120vac control	208-600	3	24"x24"x6"	30"x24"x6"	24"x24"x6"	30"x24"x8"
BR-THZ-T60-5C-0	5 DP Contactors, 60amps each, 24vac control	208-600	3	30"x24"x8"	N/A	30"x24"x8"	N/A
BR-THZ-T60-5C-1	5 DP Contactors, 60amps each, 120vac control	208-600	3	30"x24"x8"	N/A	30"x24"x8"	N/A
10-CIRCUIT PANEL							
BR-THZ-S30-10C-0	10 DP Contactors, 30amps each, 24vac control	120-600	1	24"x20"x6"	30"x24"x6"	24"x20"x6"	36"x24"x8"
BR-THZ-S30-10C-1	10 DP Contactors, 30amps each, 120vac control	120-600	1	24"x20"x6"	30"x24"x6"	24"x20"x6"	26"x24"x8"
BR-THZ-T30-10C-0	10 DP Contactors, 30amps each, 24vac control	208-600	3	30"x24"x6"	36"x24"x6"	30"x24"x8"	36"x30"x8"
BR-THZ-T30-10C-1	10 DP Contactors, 30amps each, 120vac control	208-600	3	30"x24"x6"	36"x24"x6"	30"x24"x8"	36"x30"x8"
BR-THZ-T60-10C-0	10 DP Contactors, 60amps each, 24vac control	208-600	3	30"x24"x6"	N/A	30"x24"x8"	N/A
BR-THZ-T60-10C-1	10 DP Contactors, 60amps each, 120vac control	208-600	3	30"x24"x6"	N/A	30"x24"x8"	N/A
20-CIRCUIT PANEL							
BR-THZ-S30-20C-0	20 DP Contactors, 30amps each, 24vac control	120-600	1	36"x24"x6"	N/A	36"x24"x8"	N/A
BR-THZ-S30-20C-1	20 DP Contactors, 30amps each, 120vac control	120-600	1	36"x24"x6"	N/A	36"x24"x8"	N/A
BR-THZ-T30-20C-0	20 DP Contactors, 30amps each, 24vac control	208-600	3	36"x36"x6"	N/A	36"x30"x8"	N/A
BR-THZ-T30-20C-1	20 DP Contactors, 30amps each, 120vac control	208-600	3	36"x30"x6"	N/A	36"x30"x8"	N/A
BR-THZ-T60-20C-0	20 DP Contactors, 60amps each, 24vac control	208-600	3	36"x30"x6"	N/A	36"x30"x8"	N/A
BR-THZ-T60-20C-1	20 DP Contactors, 60amps each, 120vac control	208-600	3	36"x30"x6"	N/A	36"x30"x8"	N/A

MODEL #	DESCRIPTION
-3R	Upgrade the Contactor Panel or SSR Panel to a Type 3R enclosure
-GFI	GFI protection to the control panel

Optional Local Controls:

MODEL #	DESCRIPTION	SUPPLY VOLTAGE	PHASE	AMP RATING	SUITABLE WITH		
					CONTACTOR PANEL	STAND ALONE	SSR PANEL
TZ-REM-PT	Fixed Cycle Controller w/ Adjustable Output	120/24	1	NA	-	-	✓
TZ-PCT	Adjustable Cycle Controller w/ Adjustable Output	120/240	1	28	✓	✓	✓
TZ-TIMER	0-60 Min Heavy Duty In-Wall On/Off Timer	120/240	1	28	✓	✓	✓
TZ-TIMER2HR	0-120 Min Heavy Duty In-Wall On/Off Timer	120/240	1	20	✓	✓	✓
TZ-HUB	App Based Z-Wave Wireless Connection Hub	120	1	NA	✓	✓	✓
TZ-SWITCH	App Based Z-Wave Wireless Junction Box	120/240	1	40	✓	✓	✓

"Optional controls suitable for isolated control of your heater(s), or to be paired with Berkos line of control panels to operate banks of heaters together. Options range from adjustable output cycle timers with fixed and adjustable cycle times, to standard on/off timer control, and introducing market leading Z-Wave app based control for easy operation from your phone."

Approvals: _____ _____ _____

How to Order

Example:

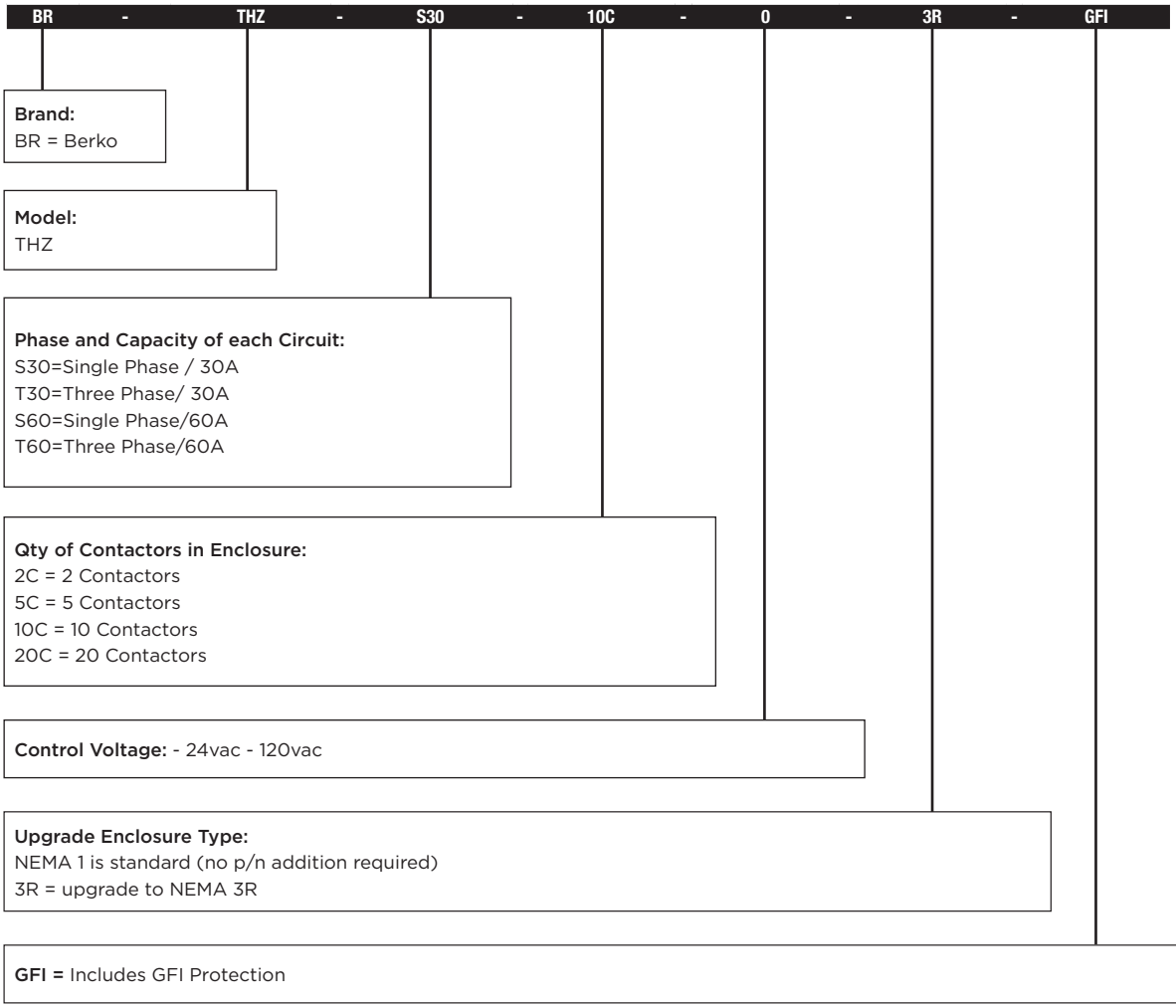

Approvals: _____ _____ _____

THZ Contactor Panel Layout - STD Type 1 Enclosure

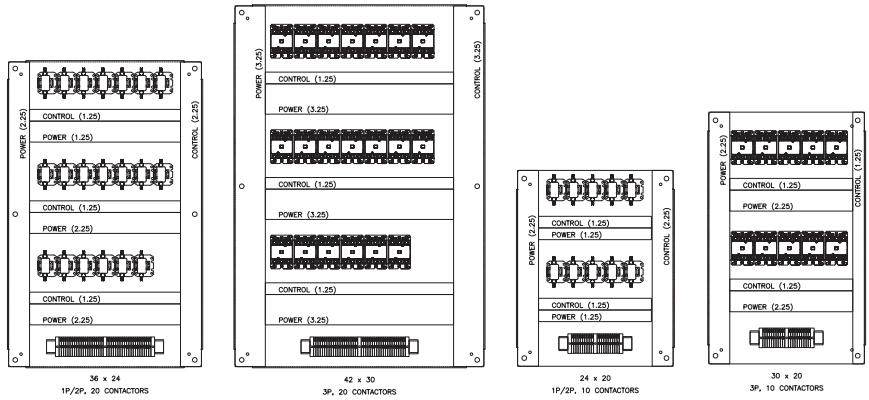

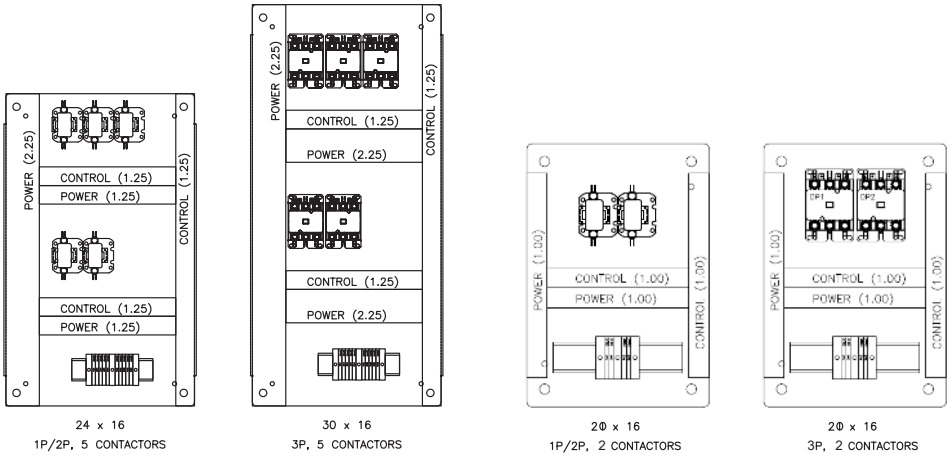

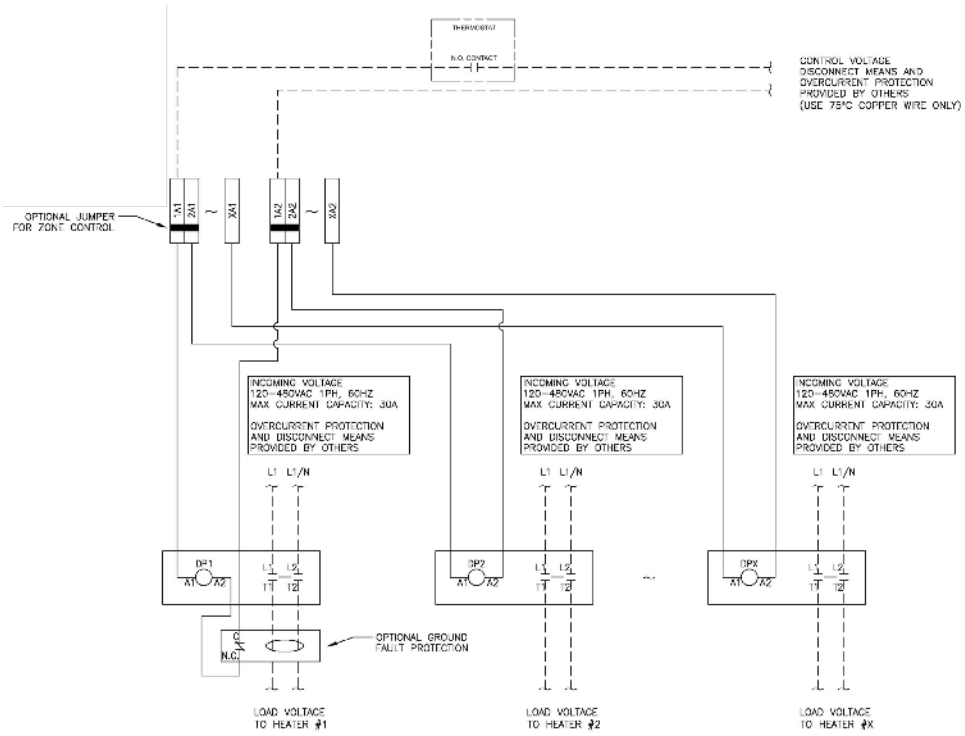

No matter the industry or application, Marley Engineered Products has a robust portfolio of innovative, reliable, high-performance comfort heating and ventilation solutions for all your heating needs.

For more information or assistance on your next project, contact Technical Services at 800-642-4328

Scan the QR code to access additional specs and features

Approvals: _____ _____ _____