LEADING EDGE®
A Marley Engineered Products Brand

NOISELESS SPEED CONTROLS

OPERATING INSTRUCTIONS

MODELS: 12001N and 12005N

CAUTION: To Be Used Only With Leading Edge 48" and 56", 120 Volt Ceiling Fans. Will Cause Damage To Other Fans.

READ CAREFULLY BEFORE ATTEMPTING TO INSTALL, OPERATE, OR SERVICE NOISELESS SPEED CONTROLS!
RETAIN INSTRUCTIONS FOR FURTHER REFERENCE.

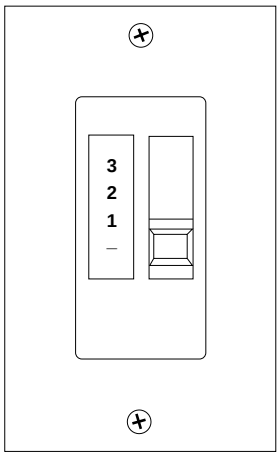

General Safety Information

WARNING: DISCONNECT POWER SUPPLY BEFORE WIRING CONNECTIONS ARE MADE TO PREVENT POSSIBLE ELECTRICAL SHOCK OR DAMAGE TO EQUIPMENT.

WARNING: READ AND FOLLOW INSTRUCTIONS CAREFULLY. FAILURE TO COMPLY WITH INSTRUCTIONS COULD RESULT IN FIRE, ELECTRICAL SHOCK, INJURY TO PERSONS, AND/OR DAMAGE TO EQUIPMENT.

1. All wiring should conform to the National Electrical Code and local regulations.
2. Do not mount in an area which will allow the control to come in contact with moisture.
3. Make certain the entire installation is grounded as a precaution against possible electrical shock.
4. Do not exceed maximum amperage rating of the control as overloading can result in damage to ceiling fan and control.
5. The control is designed to control FAN ONLY.
6. DO NOT CONNECT LEADS ACROSS LINE. Be sure that 1 wire in switch box goes to the motor and the other goes to the line power. See diagram #4.

Specifications

MODEL	VOLTS 50/60 Hz	MAX AMPS	FOR USE ONLY WITH CEILING FAN MODEL NUMBERS
12001N	120	1.0	4820-1/5600-1 5600-1LC/5630-1RDP/5610-1

MODEL	VOLTS 50/60 Hz	MAX AMPS	FOR USE ONLY WITH CEILING FAN MODEL NUMBERS
12005N	120	5.0	4820-1/5600-1 5600-1LC/5630-1RDP/5610-1

MODEL 12001N Use only ONE fan per Control. DO NOT connect more than one fan to one Control. Control is rated 1 AMP.

MODEL 12005N Use only TWO fans per Control. Even though control is rated at 5 AMPS, DO NOT connect more than TWO Fans to ONE Control.

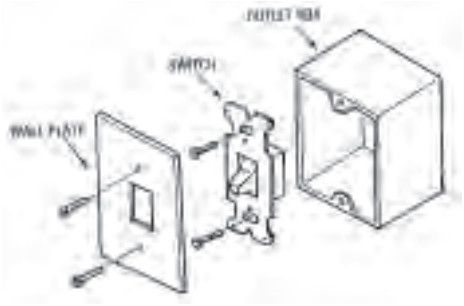

Diagram 1

Diagram 2

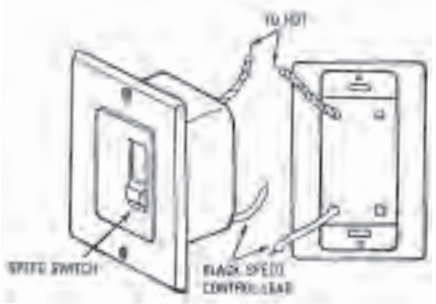

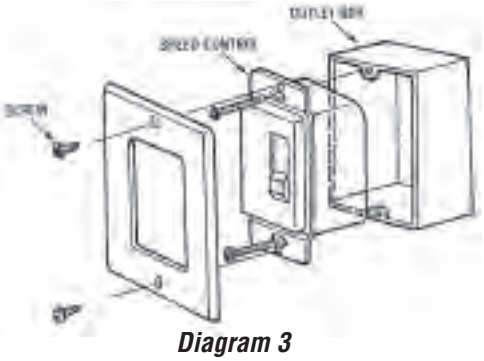

Diagram 3

Installation

1. Turn electrical power OFF at Circuit Breaker before making any connections.
2. Remove wall plate. Disconnect and remove switch or control to be replaced. See ***Diagrams #1 and #2***.
3. Make wiring connections as shown in ***Diagrams #4*** and ***#5***. Connect the black from the 120V supply to one black on the control. Connect the second black of the control to the black from the fan motor. Make sure that the wire strands are straight and attach the wire leads of the control to the circuit wires by twisting them together. Twist a wire nut onto each connection.
4. Check all connections for tightness; leave no exposed copper conductor.
5. Position connections in box, leaving room for control. See ***Diagram 3***.
6. Install speed control in wall box using screws supplied. See ***Diagram 3***.
7. Replace wall plate. Set switch on “OFF” position. Turn power on at Circuit Breaker.

Operation

Your control provides 3 precise preselected speeds, because it is a reactor type (impedance) control, it will feel very warm to the touch in operation. This is perfectly normal, and has been tested to be well within all safety limits.

MODEL 12001N For use with one fan only.

MODEL 12005N For use with two fans only. Connecting more than recommended number of fans could cause damage to Fans and/or Control.

Diagram 4

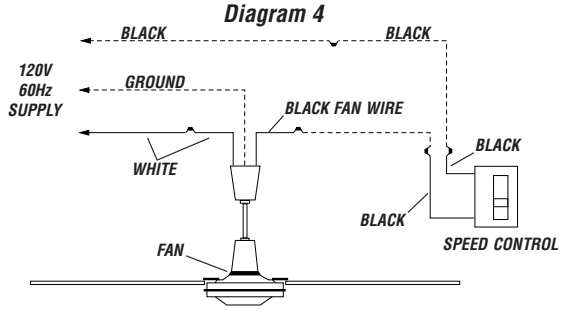

12001N Single Fan Wiring Diagram

Diagram 5

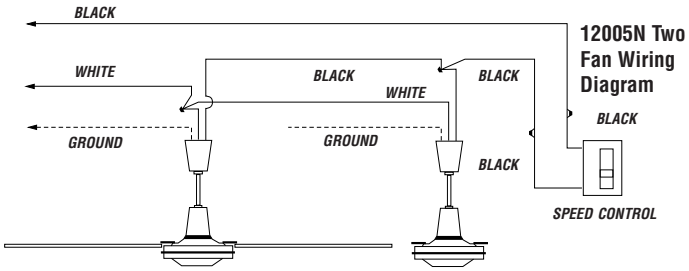

LIMITED WARRANTY

All products manufactured by Marley Engineered Products are warranted against defects in workmanship and materials for three years from date of installation. This warranty does not apply to damage from accident, misuse, or alteration; nor where the connected voltage is more than 5% above the nameplate voltage; nor to equipment improperly installed or wired or maintained in violation of the product’s installation instructions. All claims for warranty work must be accompanied by proof of the date of installation.

The customer shall be responsible for all costs incurred in the removal or reinstallation of products, including labor costs, and shipping costs incurred to return products to Marley Engineered Products Service Center. Within the limitations of this warranty, inoperative units should be returned to the nearest Marley authorized service center or the Marley Engineered Prodcuts Service Center, and we will repair or replace, at our option, at no charge to you with return freight paid by Marley. It is agreed that such repair or replacement is the exclusive remedy available from Marley Electric Heating.

THE ABOVE WARRANTIES ARE IN LIEU OF ALL OTHER WARRANTIES EXPRESSED OR IMPLIED, AND ALL IMPLIED WARRANTIES OF MERCHANTABILITY AND FITNESS FOR A PARTICULAR PURPOSE WHICH EXCEED THE AFORESAID EXPRESSED WARRANTIES ARE HEREBY DISCLAIMED AND EXCLUDED FROM THIS AGREEMENT. MARLEY ENGINEERED PRODUCTS SHALL NOT BE LIABLE FOR CONSEQUENTIAL DAMAGES ARISING WITH RESPECT TO THE PRODUCT, WHETHER BASED UPON NEGLIGENCE, TORT, STRICT LIABILITY, OR CONTRACT.

Some states do not allow the exclusion or limitation of incidental or consequential damages, so the above exclusion or limitation may not apply to you. This warranty gives you specific legal rights, and you may also have other rights which vary from state to state.

For the address of your nearest authorized service center, contact Marley Engineered Prodcuts in Bennettsville, SC, at 1-800-642-4328. Merchandise returned to the factory must be accompanied by a return authorization and service identification tag, both available from Marley Engineered Products. When requesting return authorization, include all catalog numbers shown on the products.

HOW TO ORDER REPAIR PARTS

In order to obtain any needed repair or replacement parts, warranty service or technical information, please contact Marley Engineered Products Service Center toll-free by calling 1-800-642-HEAT.

Marley Engineered Products
470 Beauty Spot Rd. East
Bennettsville, SC 29512 USA

PPD021
Part No. 5200-2406-000
07-99