Marley
Engineered Products

Portable High Temperature Blower Heater



⚠WARNING

Attention: Do not operate this heater in explosive areas.

Installation & Maintenance Instructions

Dear Owner,

Congratulations! Thank you for purchasing this new heater by Marley Engineered Products. You have made a wise investment selecting the highest quality product in the heating industry. Please carefully read the installation and maintenance instructions shown in this manual. You should enjoy years of efficient heating comfort with this product from Marley Engineered Products... the industry's leader in design, manufacturing, quality and service.

... The Employees of
Marley Engineered Products

Specifications – Table 1

Model	Electrical Data (50 Hz)					Dimensions (In)		
	Volts	kW	Phase	Amps	BTU	Height	Width	Depth
SDH3043	480	30	3	37.2	102,360	38.5	26	44
SDH3093	600	30	3	30.0	102,360	38.5	26	44
SDH4843	480	48	3	58.9	163,776	38.5	30-1/4	44
SDH4893	600	48	3	47.3	163,776	38.5	30-1/4	44
SDH6043	480	60	3	73.3	204,720	38.5	30-1/4	44
SDH6093	600	60	3	58.9	204,720	38.5	30-1/4	44

WARNING - IMPORTANT SAFTY INSTRUCTIONS

When using electrical appliances, basic precautions should always be followed to reduce the risk of fire, electric shock and injury to persons, including the following:

1. Read all instructions before using this heater.
2. This heater is hot when in use. To avoid burns, do not let bare skin touch hot surfaces. If provided, use handles when moving this heater. Keep combustible materials, such as furniture, pillows, bedding, papers, clothes, and curtains at least 3 feet (0.9m) from the front of the heater and keep them away from the sides and rear.
3. Extreme caution is necessary when any heater is used by or near children or handicapped individuals and whenever the heater is left operating and unattended.
4. Always disconnect heater when not in use.
5. Do not operate any heater with a damaged cable or plug or after the heater malfunctions, has been dropped or damaged in any manner. Return heater to authorized service facility for examination, electrical or mechanical adjustments, or repair.
6. Do not use outdoors.
7. This heater is not intended for use in bathrooms, laundry areas and similar indoor locations. Never locate heater where it may fall into a bathtub or other water container.
8. Do not run cord under carpeting. Do not cover cord with throw rugs, runners or the like. Arrange cord away from traffic area and where it will not be tripped over.
9. To disconnect heater, turn thermostat off, then remove plug from outlet.
10. Connect to properly grounded outlets only.
11. Do not insert or allow foreign objects to enter any ventilation or exhaust opening as this may cause an electric shock, fire or damage the heater.
12. To prevent a possible fire, do not block air intakes or exhaust in any manner. Do not use on soft surfaces, like a bed, where opening may become blocked.
13. A heater has hot and arcing or sparking parts inside.Do not use it in areas where gasoline, paint, flammable liquids are used or stored.
14. Use this heater only as described in this manual. Any other use not recommended by the manufacturer may cause fire, electric shock or injury to persons.
15. This heater is not intended for use with an extension cord.
16. Do not use as a residential or household heater.
17. SAVE THESE INSTRUCTIONS.

WIRING

⚠WARNING

ELECTRIC SHOCK HAZARD. Disconnect all power before installing or servicing heater. Failure to do so could result in personal injury or property damage. Heater must be effectively grounded in accordance with the National Electrical Code, NFPA 70.

1. Use heater only on the voltage and frequency specified on the nameplate.
2. All wiring should be done in accordance with local codes and the National Electrical Code by a qualified person.
3. Branch circuit wire for connection to heater must be at least 90˚C wire.
4. The top access panel is secured by 4 screws that must be loosened to gain access.
5. A ground terminal is provided near the power terminal board. The ground wire should be connected before other connections are made.
6. Refer to Table A for proper size “SO” grade of cable.
7. A proper strain relief must be used with “SO” grade cable.
8. Heaters are factory pre-wired for 3-phase delta operation. Some units can be converted to single phase operation by changing the wiring. The appropriate wiring diagram is also located on the back of the wiring compartment cover.

Cord Preparation for Portable Heaters

1. Determine the gage and number of conductors from the tabulation below using amps and phase from the heater nameplate. It is not recommended that cord exceed 50 feet in length.

Table A

Model Number	Volts	kW	Phase	Amps	Min Wire Size
SDH3043	480	30	3	37.2	6 Ga
SDH3063	600	30	3	30.0	8 Ga
SDH4843	480	48	3	58.9	4 Ga
SDH4863	600	48	3	47.3	4 Ga
SDH6043	480	60	3	73.3	2 Ga
SDH6063	600	60	3	58.9	4 Ga

SET-UP AND OPERATION

Heaters in the heat mode should not be operated in room temperatures above 130˚F. Fan motor is not designed to operate in ambients below -10˚F. The SDH is designed to be used with 20” diameter flexible duct. A feature of the heater is that the fan speed can be easily adjusted from 1500 to 2300rpm, (SDH heaters are shipped from the factory with the fan speed set at 1800 rpm). The maximum external static load for the blower is .38” H_2O, regardless of the fan speed selected. The outlet temperature is controlled by a built-in thermostatic control; the maximum outlet temperature is a function of the kW rating and the amount of air (cfm) flowing through the heater. The addition of flexible duct will provide additional static load, resulting in a lower cfm, the lower air flow will reaise maximum outlet temperature until the static load reaches .38”H_2O. Exceeding the maximum static load will result in the tripping of the overtemperature control. The performance range of the SDH units is as shown in table B.

The motor and fan have variable pitch pulleys for changing the air flow and the ΔT. Graphs 1, 2 and 3 provide the performance data for each size heater at the recommended minimum, medium and maximum fan speeds. The curves end at the point where the .38” H_2O static load has been reached. The temperature rise is based on using Marley 20” diameter SDHFX20 flexible duct. The performance curves were determined by actual testing; therefore using flexible duct not supplied by Marley may vary the results. The introduction of bends in the ducting will add static load equivalent to adding 15 feet of duct length for each 90˚ bend and 25 feet of duct length for each 180˚ bend.

Table B

kW	Fan RPM	CFM	Δ T No Load	Max. Static Load	ΔT at Max. Static Load
30	1800	2200	42˚F	.38” H_2O	86˚F
48	1800	2200	68˚F	.38” H_2O	144˚F
60	1800	2200	88˚F	.38” H_2O	170˚F

WIRING (cont'd.)

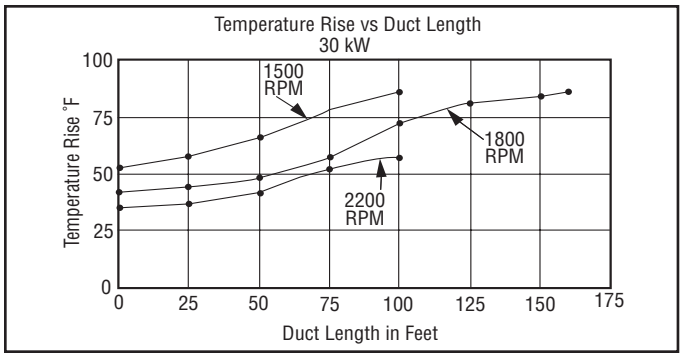

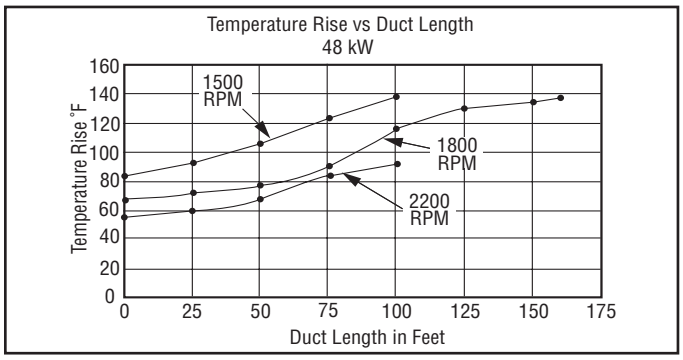

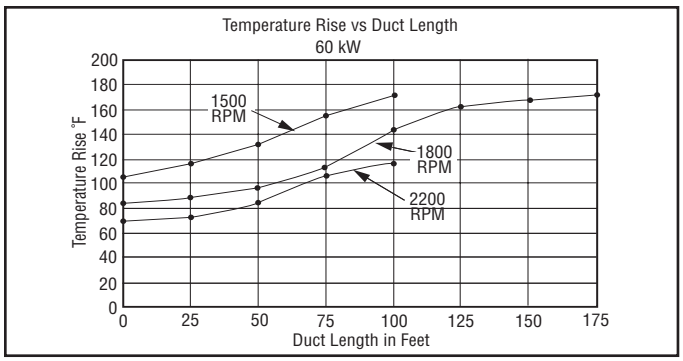

SDH heaters can be easily field if modified to vary the fan speed. There may be some circumstances where the use of short lengths of duct may not create sufficient pressure drop to achieve the desired temperature rise. This may also be the case of using the unit without a duct. This insufficient static pressure drop may result in high air flow, with the maximum temperature rise below the desired level, (even after the fan speed has been reduced to the minimum rpm). An accessory SDHAD, adjustable damper, is available and can be attached to the heater to produce a static load, ranging from .1" to .19" H_2O which will act to reduce the amount of air flow.

The "Friction Loss" Graph 4 provides the actual test data on the friction loss for the ADHAD damper attachment. The losses are stated as the equivalent length in feet of 20" duct.

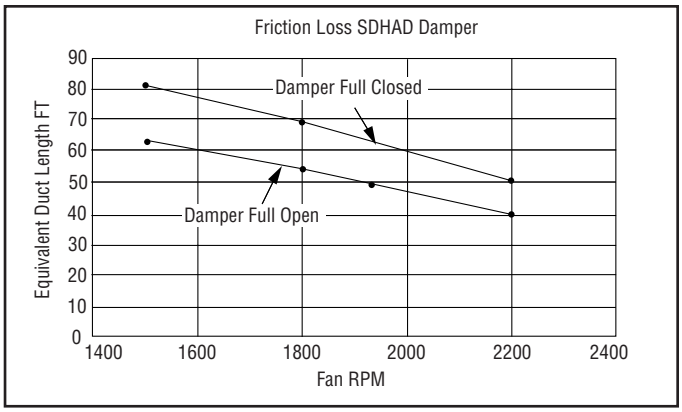

The SDH Dragon includes 2 thermostats. The thermostat on the air inlet end of the unit is for the minimum air temperature desired. The thermostat on the discharge end of the heater is for the maximum air temperature desired. The two thermostats are wired in series with the heating element contactor coil. The temperature range of both thermostats is 60 - 180°F.

ACCESSORIES

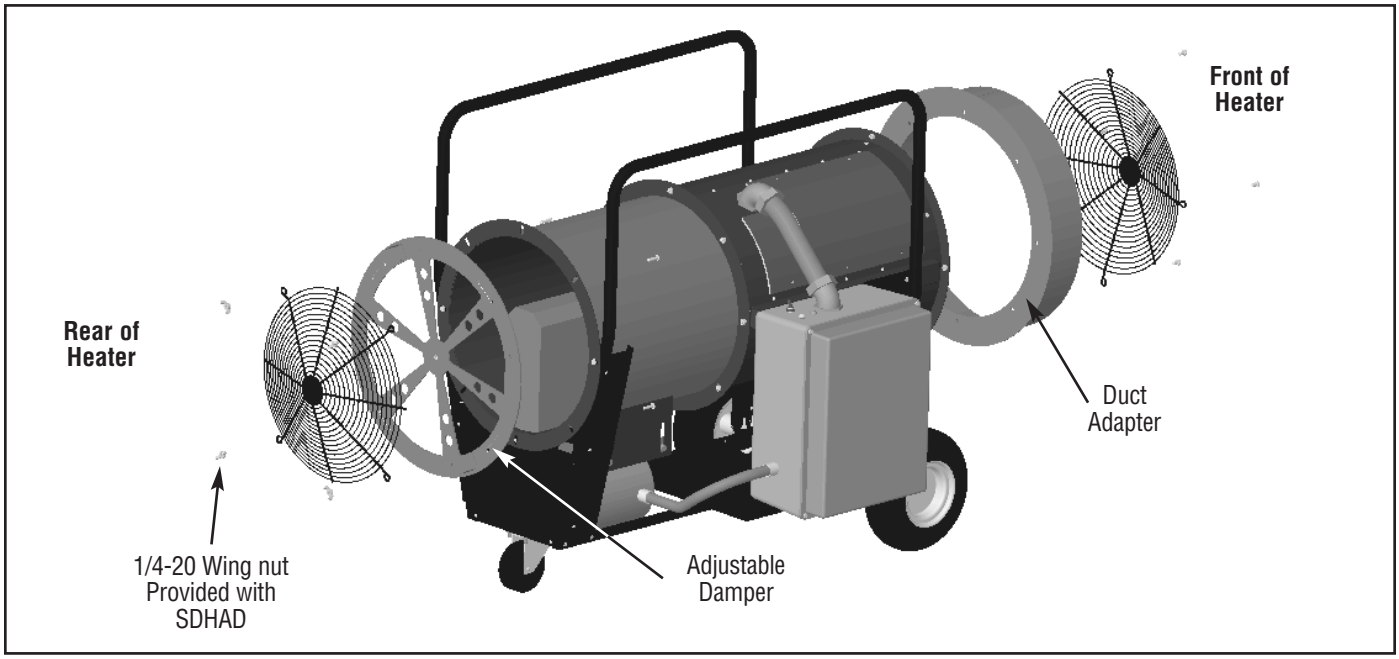

Adjustable Damper and Duct Adaptor

FAN SPEED ADJUSTMENTS

Changing the Pitch Diameter of the Sheaves:

1. Tools required: 5/32" allen wrench, 3/8" nut driver, 9/16" box wrench and a medium size phillips screwdriver.
2. Remove the lower belt cover by removing the (5) sheet metal screws.
3. Remove the rear grille by removing the (4) 1/4" bolts and nuts.
4. Remove the belt cover inside the blower by removing the (4) sheet metal screws.
5. Loosen the (4) bolts, (2) on each side. See Fig. 1.

Figure 1

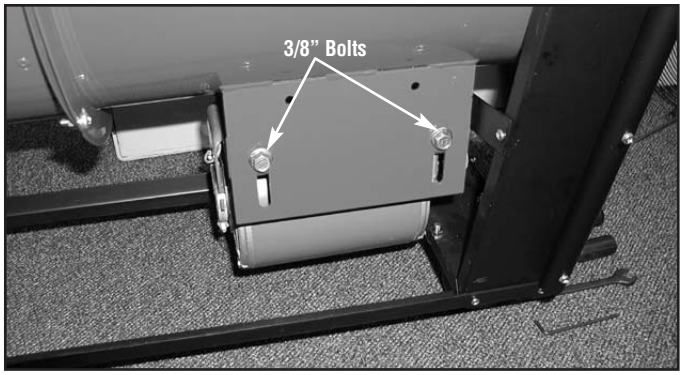

6. Loosen the (2) motor tension lock nuts and the fan belt tension adjusting bolts. See Fig.2

Figure 2

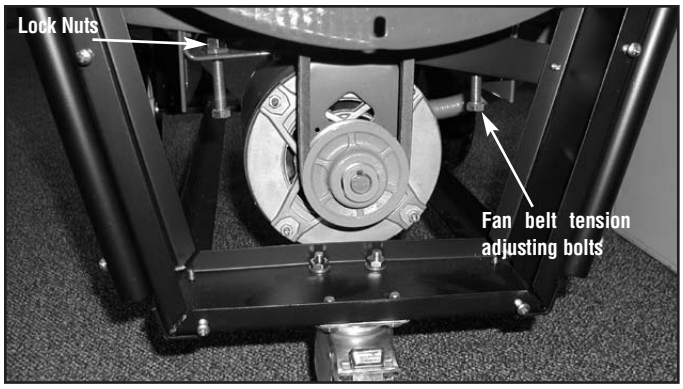

7. Loosen the set screw on the fan pulley or motor pulley. Fig. 3 shows the construction of the fan pulley, the motor pulley is the same construction.

Figure 3

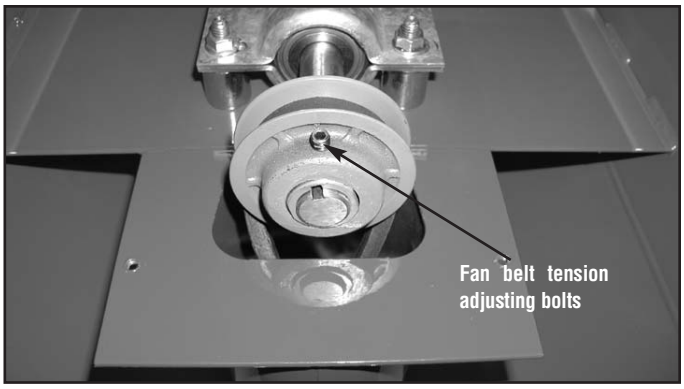

8. Rotate the front half of the pulley clockwise until it bottoms, then rotate counter clockwise until the set screw aligns with the flat in the threaded half of the pulley. The pulley is now in position for adjustment. See Table 1 for the number of turns out. **Tip:** Leave allen wrench in set screw and use free hand to hold fan blade.

Table 1

Fan RPM	No. of turns from full closed		Fan RPM	No. of turns from full closed	
	Motor Pulley	Fan Pulley		Motor Pulley	Fan Pulley
1500	3	1-1/2	1950	1-1/2	3
1600	2-1/2	1-1/2	2000	1-1/2	3-1/2
1650	2	1-1/2	2100	1-1/2	4
1725	1-1/2	1-1/2	2200	1-1/2	4-1/2
1800	1	1-1/2	2300	1	4-1/2
1850	1/2	1-1/2			

9. Retighten set screw, use of thread locking compound is recommended.
10. Adjust fan belt tension, see Fig. 2. A 1/2" of belt deflection is recommended. Tighten lock nuts.
11. Tighten the 3/8" bolts, see Fig. 1
12. Rotate fan blade to make sure the fan belt does not rub.
13. Reinstall top belt cover, grille and lower belt cover. **Tip:** Installing the grille before installing the lower cover makes it easier to access the two lower grille bolts.

WIRING DIAGRAMS

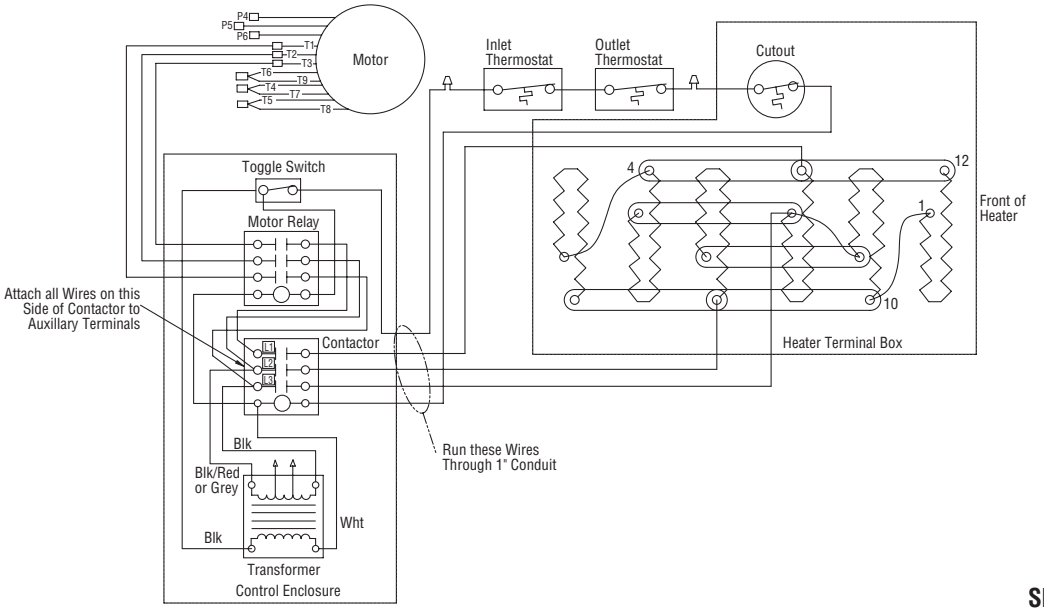

SDH 30kW, 480V, 3PH

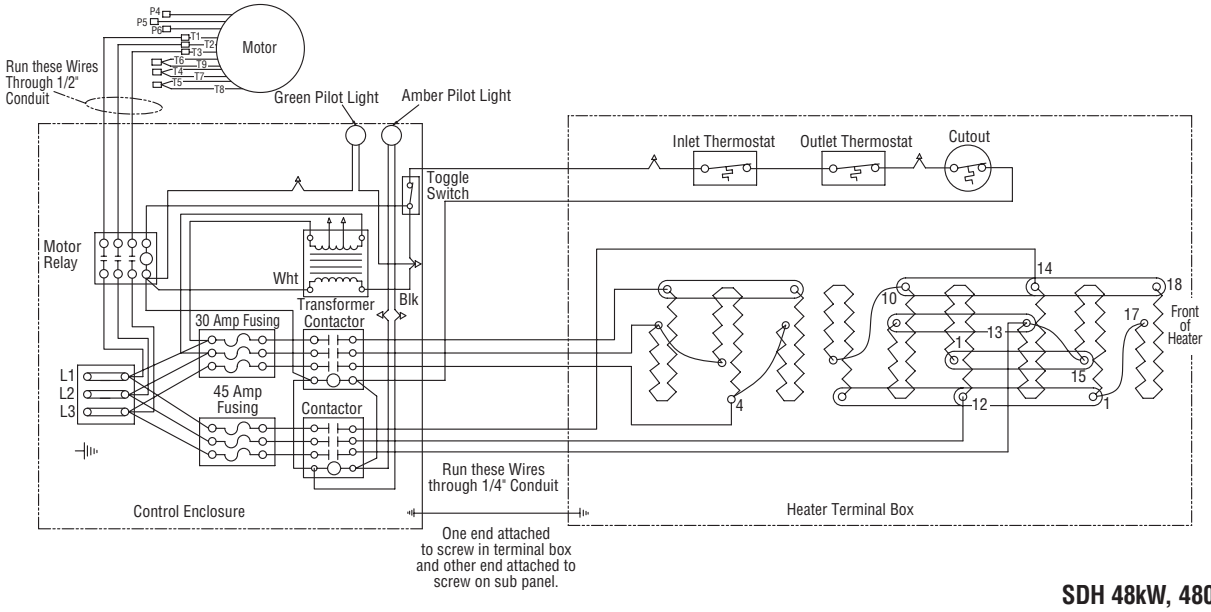

SDH 48kW, 480V, 3PH

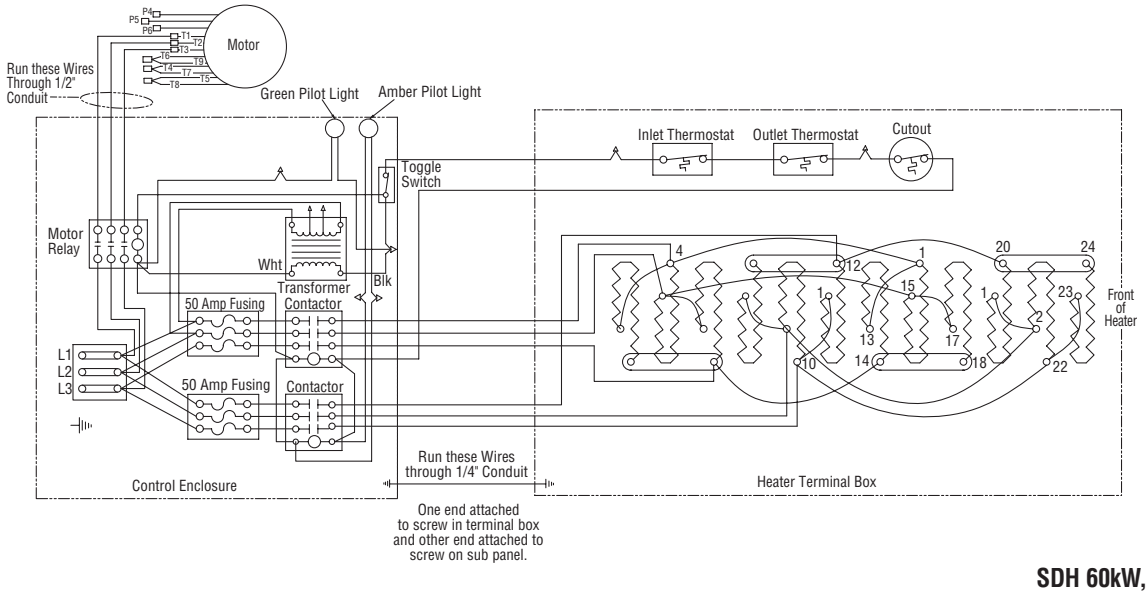

SDH 60kW, 480V, 3PH

PARTS LOCATION

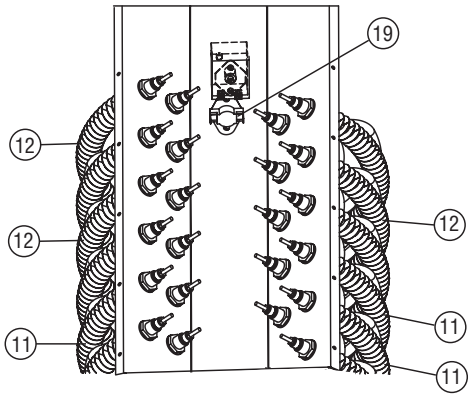

Element Assembly 30kW

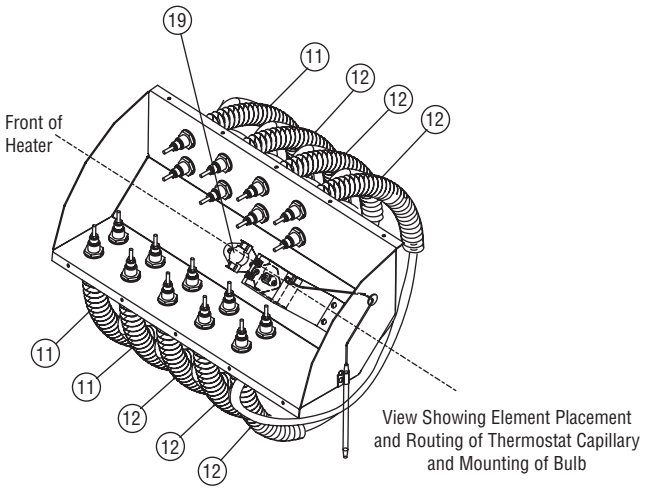

Element Assembly 48kW

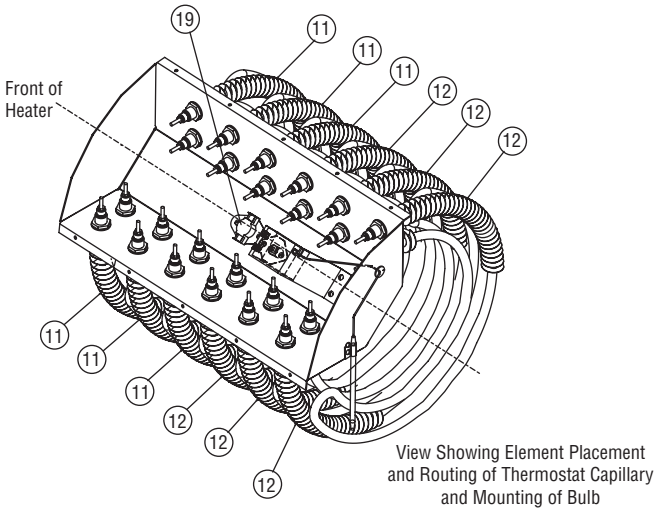

Element Assembly 60kW

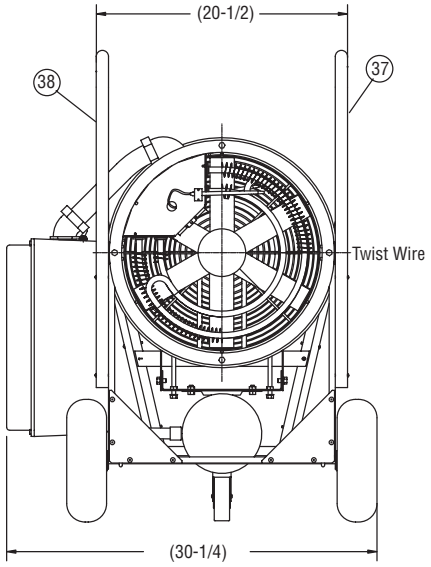

Front View with Grille Removed (All Sizes)

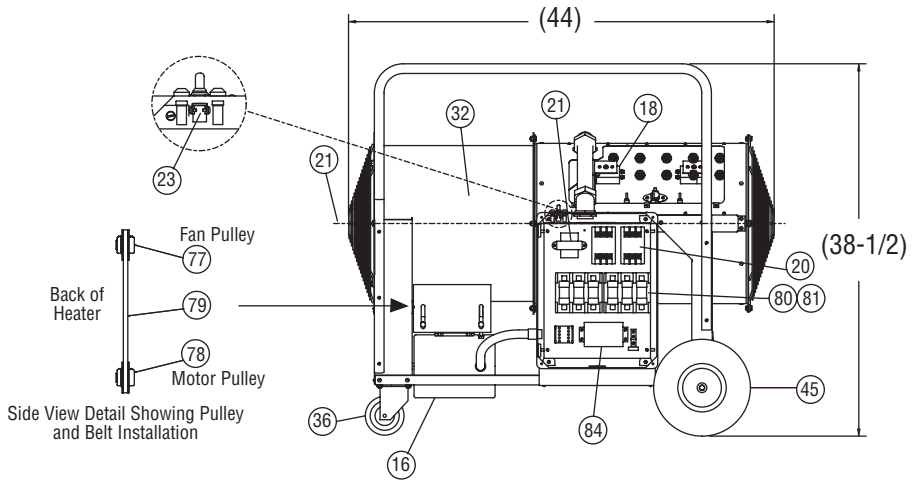

Side View shown with Heater and Control Terminal Box Covers Removed
All Sizes

MAINTENANCE

⚠WARNING

ELECTRIC SHOCK HAZARD. Disconnect heater from power supply before servicing and/or inspecting the heater; failure to do so may result in electrical shock.

Replace or repair damaged cords or plugs immediately. Check tightness of all electrical connections prior to energizing heater. Blow out or vacuum away any dirt or debris that may have accumulated around the control enclosure fan motor or heating elements.

RENEWAL PARTS IDENTIFICATION

Model No.	Volts	kW	Phase	Element (11) Part No.	Element (12) Part No.	Motor (16) Part No.	Contactor (20) Part No.	Transformer (21) Part No.	Fuse Block (80) Part No.	Fuse (81) Part No.	Term. Block (84) Part No.
SDH3043	480	30	3	118-304793-011(3)	118-304793-013(3)	193-121843-232	072-304551-008	315-304252-001	N/A	N/A	N/A*
SDH3093	600	30	3	118-304793-012(3)	118-304793-014(3)	193-121843-233	072-304551-008	315-304252-003	N/A	N/A	N/A*
SDH4843	480	48	3	118-304793-011(3)	118-304793-013(6)	193-121843-232	072-304551-008(2)	315-304252-001	129-025643-001	128-026510-005(3)	303-047468-004
SDH4893	600	48	3	118-304793-012(3)	118-304793-014(6)	193-121843-233	072-304551-008(2)	315-304252-003	129-025643-001	128-026510-005(3)	303-047468-004
SDH6043	480	60	3	118-304793-011(6)	118-304793-013(6)	193-121843-232	072-304551-008(2)	315-304252-001	129-025643-001(2)	128-026510-006(6)	303-047468-004
SDH6093	600	60	3	118-304793-012(6)	118-304793-014(6)	193-121843-233	072-304551-008(2)	315-304252-003	129-025643-001(2)	128-026510-006(6)	303-047468-004

* Wired directly to contactor.
All units contain two sets of elements. The ratings of the elements on the discharge end have a lower wattage than the elements on the inlet end of heater. The ends of the elements are color coded, the lower wattage are color coded yellow and the higher wattage are color coded blue.
a. Lower wattage elements, discharge end, yellow coded
b. Higher wattage elements, fan end, blue coded

PARTS COMMON TO ALL UNITS		
Item	**Description**	**Part No.**
18	Temperature Control	300-019560-002
19	Hi-Limit Cut-out	300-049200-004
23	Toggle Switch	292-046123-001
32	Blower Assembly	021-304823-009
33	Inlet & Outlet Grille	134-304780-002(2)
36	Caster / Locking	375-122535-007
37	Handle - Right Side	139-304779-003
38	Handle - Left Side	139-304779-004
45	Semipneumatic Wheel	333-557518-004(2)
77	Pulley Var. Pitch 7/8”	225-305091-004
78	Pulley Var. Pitch 5/8”	225-305091-003
79	Pulley Belt	017-049702-009
86	Pilot Light - Green	213-122066-043
87	Pilot Light - Amber	213-122066-042
94	Thermostat Knob	169-017949-004
95	Thermostat Label	220-019122-010

LIMITED WARRANTY

All products manufactured by Marley Engineered Products are warranted against defects in workmanship and materials for one year from date of installation, except heating elements which are warranted against defects in workmanship and materials for five years from date of installation. This warranty does not apply to damage from accident, misuse, or alteration; nor where the connected voltage is more than 5% above the nameplate voltage; nor to equipment improperly installed or wired or maintained in violation of the product's installation instructions. All claims for warranty work must be accompanied by proof of the date of installation.

The customer shall be responsible for all costs incurred in the removal or reinstallation of products, including labor costs, and shipping costs incurred to return products to Marley Engineered Products Service Center. Within the limitations of this warranty, inoperative units should be returned to the nearest Marley authorized service center or the Marley Engineered Products Service Center, and we will repair or replace, at our option, at no charge to you with return freight paid by Marley. It is agreed that such repair or replacement is the exclusive remedy available from Marley Engineered Products.

THE ABOVE WARRANTIES ARE IN LIEU OF ALL OTHER WARRANTIES EXPRESSED OR IMPLIED, AND ALL IMPLIED WARRANTIES OF MERCHANTABILITY AND FITNESS FOR A PARTICULAR PURPOSE WHICH EXCEED THE AFORESAID EXPRESSED WARRANTIES ARE HEREBY DISCLAIMED AND EXCLUDED FROM THIS AGREEMENT. MARLEY ENGINEERED PRODUCTS SHALL NOT BE LIABLE FOR CONSEQUENTIAL DAMAGES ARISING WITH RESPECT TO THE PRODUCT, WHETHER BASED UPON NEGLIGENCE, TORT, STRICT LIABILITY, OR CONTRACT.

Some states do not allow the exclusion or limitation of incidental or consequential damages, so the above exclusion or limitation may not apply to you. This warranty gives you specific legal rights, and you may also have other rights which vary from state to state.

For the address of your nearest authorized service center, contact Marley Engineered Products in Bennettsville, SC, at 1-800-642-4328. Merchandise returned to the factory must be accompanied by a return authorization and service identification tag, both available from Marley Engineered Products. When requesting return authorization, include all catalog numbers shown on the products.

How to order repair parts:
In order to obtain any needed repair or replacement parts, warranty service or technical information, please contact the Marley Engineered Products Service Center toll-free by calling 1-800-642-HEAT. When ordering replacement parts, always give the information listed as follows:

1. The Part Number
2. The Model Number
3. The Part Description
4. Date of Manufacture

ECR
36513
3/05

Marley
Engineered Products

470 Beauty Spot Rd. East
Bennettsville, SC 29512 USA