BERKO®
A Marley Engineered Products Brand

470 Beauty Spot Rd. E, Bennettsville, SC 29512

BPH
PLENUM RATED HEATER

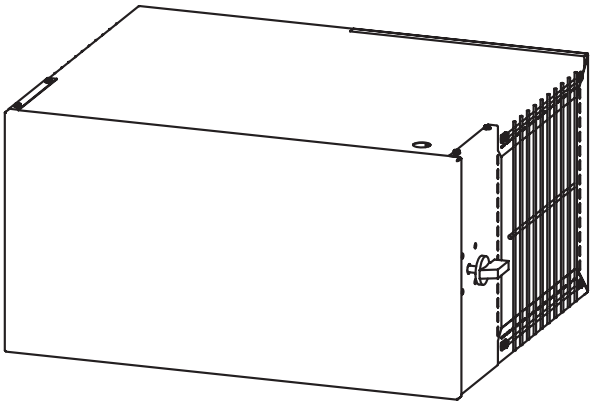

CAPACITIES
3kw to 15kw Watts
208, 240, 277, or 480 V
1Ø and 3Ø

ITEM	QTY.	CAT. NO.	TAG	HEATER			AMPS	CONTROL VOLTS	MOTOR VOLT	AIR FLOW		NO. OF STAGES	BUILT-IN CONTROLS
				KW	VOLTS	Ø				CFM	TEMP RISE		

ACCESSORIES AND CONTROLS

ITEM	QTY.	CAT. NO.	TAG	DESCRIPTION

SUBMITTED BY:	DATE

APPROVED BY:	DATE

BPH SERIES

BERKO®
A Marley Engineered Products Brand

470 Beauty Spot Rd. E, Bennettsville, SC 29512

CATALOG NUMBER	PHASE	KW	VOLTAGE	AMPS*	LOW SPEED** CFM	LOW SPEED** RISE	HIGH SPEED** CFM	HIGH SPEED** RISE	WT. LBS	H X W X L
BPH138124			208	15.32						
BPH132124	1	3	240	13.4						
BPH137124			277	11.63	350	27ºF	400	24ºF	49	12.5"x19.5"x24
BPH138324			208	9.23						
BPH132324	3	3	240	8.12						
BPH134324			480	4.11						
BPH158124			208	24.94						
BPH152124	1	5	240	21.73						
BPH157124			277	18.85	350	45ºF	400	39ºF	49	12.5"x19.5"x24"
BPH158324			208	14.78						
BPH152324	3	5	240	12.93						
BPH154324			480	6.51						
BPH158124L			208	24.94						
BPH152124L	1	5	240	21.73						
BPH157124L			277	18.85	850	20ºF	1000	16ºF	49	18"x18"x35.5
BPH158324L			208	14.78						
BPH152324L	3	5	240	12.93						
BPH154324L			480	6.51						
BPH1758124			208	38.12						
BPH1752124	1	7.5	240	33.31						
BPH1757124			277	28.91	850	28ºF	1000	24ºF	69	18"x18"x35.5
BPH1758324			208	22.88						
BPH1752324	3	7.5	240	20.1						
BPH1754324			480	10.16						
BPH1102124	1	10	240	43.73		37ºF		31ºF		
BPH1107124			277	37.93						
BPH2102124	1	10	240	43.73	850	37º / 20ºF	1000	31º / 16ºF		
BPH2107124			277	37.93						
BPH1108324			208	29.82						
BPH1102324	3	10	240	26.12		37ºF		31ºF		
BPH1104324			480	13.17					69	18"x18"x35.5"
BPH2108324			208	29.82						
BPH2102324	3	10	240	26.12	850	37º / 20ºF	1000	31º / 16ºF		
BPH2104324			480	13.17						
BPH1158324			208	43.9						
BPH1152324	3	15	240	38.14	850	56ºF	1000	47ºFº		
BPH1154324			480	19.18						
BPH2152324	3	15	240	38.14	850	56º / 28ºF	1000	47º / 24ºF		
BPH2154324			480	19.18						

**Total Amps including Resistive and Inductive loads.*
***Low and High speed fan operation is determined during installation of thermostat set up † Tested @0.2" S.P.*
Low speed fan operation not available on 480V models.

Duct Flanges

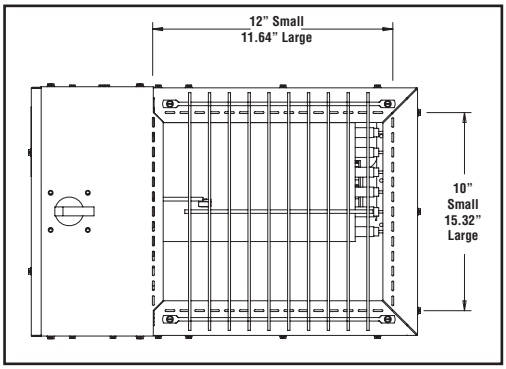

ARCHITECT'S AND ENGINEER'S SPECIFICATIONS

The electric plenum rated heaters shall be as manufactured by Berko, A Marley Engineered Products Brand.

Heaters shall be certified by ETL to standard for heating and cooling equipment ANSI/UL 1995, CAN/CSA C22-2 No. 236.05, third edition, designed for mounting for horizontal discharge. All capacities, voltages, physical sizes, grille arrangements and options shall be as specified in the heater schedule. All three phase heaters shall have a balanced heating load. Control voltage is to be internally generated 24 VAC.

CABINET - The cabinet shall be of 20 gauge all powder coated steel with acoustic fiberglass insulation. The heater front cover shall be securely attached to the cabinet with screws and are easily removable for access to elements, filters and control panel. The inlet and outlet ends of the cabinet are equipped with perforated flanges for duct connection. Cabinet to be finished in a matte black powder coat.

HEATING ELEMENTS - The heating elements shall be warranted for five years and shall be of non-glowing design consisting of 80-20 Ni/Cr- resistance wire enclosed in a steel sheath to which steel plate fins are brazed. The heating element shall be located directly in front of the blower discharge air for uniform heating.

SAFETY THERMAL CUTOUTS - Thermal safety cutouts shall be built into the system to automatically shut off heater in event of overheating due to any cause. The safety cutouts shall directly interrupt power to the elements.

MOTOR AND BLOWER ASSEMBLY - The motor(s) and blower(s) shall be direct drive and resiliently mounted on a rigid heavy gauge frame for quiet operation and long life. The motor(s) shall be 1/6 HP or 1/4 HP with automatic reset overload. The 480V units shall be single speed (high); all other units shall be two speed. 208, 240 and 277 volt motors are semi-enclosed and the 480 volt is totally enclosed. Motor fuse protection shall be provided to meet UL, cUL and NEC requirements. The blower(s) shall be forward curved, double inlet, centrifugal type with discharge directly on the full length of the elements to provide uniform discharge air temperatures.

AIR FILTERS- The optional filter kit shall be located ahead of the motor and blower assembly to assure clean air circulation. The filter shall filter the returning room air. Filter shall be easily removed for changing or cleaning by removing the access door and pulling on the filter. A disposable filter is standard and a permanent washable filter is optional.

DISCONNECT SWITCH -
The unit shall have a 80 amp 3 pole disconnect for single point connection.

FAN DELAY CONTROL -Fan control shall delay fan start up of the fan motor(s) until the heating elements have warmed up. It shall maintain motor operation after heating
elements have been de-energized to dissipate residual heat.

TEMPERATURE CONTROL -
The unit is designed to be controlled by a remote 24 Volt thermostat. thermostat connections are made at the control terminal board.

HEAT SELECTION / FAN SPEED - Two fan speeds and high-low heat ranges shall be selectable by means of the remote thermostat.

The following Factory Installed / prewired Equipment shall be supplied -
- Auto Reset Thermal Cutout
- 24V Control Supply
- Time Delay Relay
- Disconnect Switch
- Inlet / Discharge Duct Collars

The following Field Installed Optional Equipment shall be supplied -
- Filter Rack
- Louver Rack
- Aluminum Wall Louver
- Electronic Digital 2 Stage 24V control

DIMENSIONS - Small Cabinet

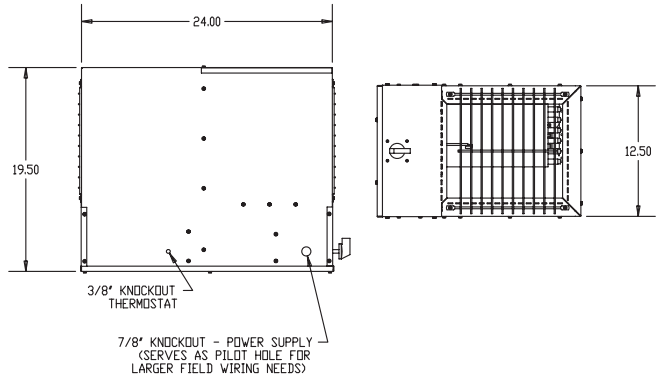

DIMENSIONS - Large Cabinet

