Marley
Engineered Products

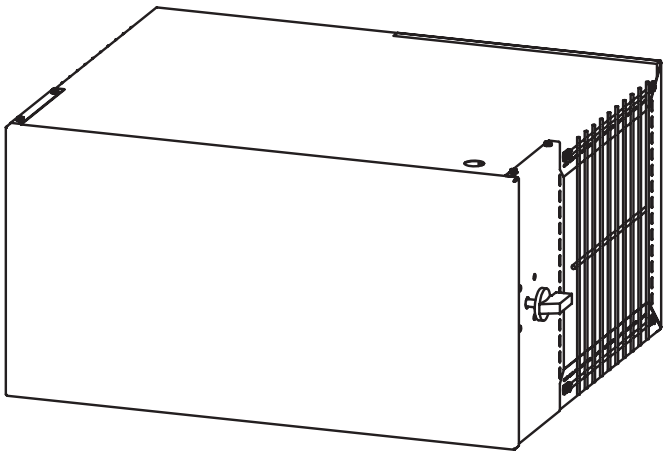

PRH Series
Plenum Heaters

Installation & Maintenance Instructions

Dear Owner,

Congratulations! Thank you for purchasing this new heater manufactured by Marley Engineered Products. You have made a wise investment selecting the highest quality product in the heating industry. Please carefully read the installation and maintenance instructions shown in this manual. You should enjoy years of efficient heating comfort with this product from Marley Engineered Products... the industry's leader in design, manufacturing, quality and service.

... The Employees of Marley Engineered Products

⚠ WARNING ⚠

Read Carefully - These instructions are written to help you prevent difficulties that might arise during installation of heaters. Studying the instructions first may save you considerable time and money later. Observe the following procedures and cut your installation time to a minimum.

TO REDUCE RISK OF FIRE OR ELECTRIC SHOCK:

1. Disconnect all power coming to the heater at main service panel before wiring or servicing.

Note: More than one disconnect may be required.

2. All wiring must be in accordance with national and local electric codes and the heater must be grounded.
3. Verify the power supply voltage coming to heater matches the ratings printed on the heater nameplate before energizing.
4. This heater is hot when in use. To avoid burns, do not let bare skin touch hot surfaces.
5. Do not insert or allow foreign objects to enter any ventilation or exhaust opening as this may cause electric shock, fire, or damage to heater.
6. Do not block air intakes or exhaust in any manner.
7. A heater has hot and arcing (sparking) parts inside. Do not use in areas where gasoline, paint, or flammable liquids are used or stored.
8. Use this heater only as described in this manual. Any other use not recommended by the manufacturer may cause fire, electric shock, or injury.
9. This heater is not approved for use in corrosive atmospheres such as marine, green house, or chemical storage areas.
10. FOR DUCT CONNECTED HEATERS, rated at 0.20" external static pressure.

SAVE THESE INSTRUCTIONS

GENERAL INFORMATION:

The PRH Series plenum heaters are design certified by ETL to Standard for Heating and Cooling Equipment ANSI / UL 1995, CAN/CSA C22.2 No. 236-05, third edition. The PRH Series plenum heaters are unique application heaters approved for installation in a concealed space, an area between a finished ceiling and drop ceiling, a plenum space or inside a plenum. These series of heaters may be installed in areas that are not readily accessible and may be installed with a duct system or installed for free-air discharge. Always install units to operate within the intended temperature rise, intended external static pressure range and in the intended installation position (see Figure 2 horizontal-right).

Figure 2

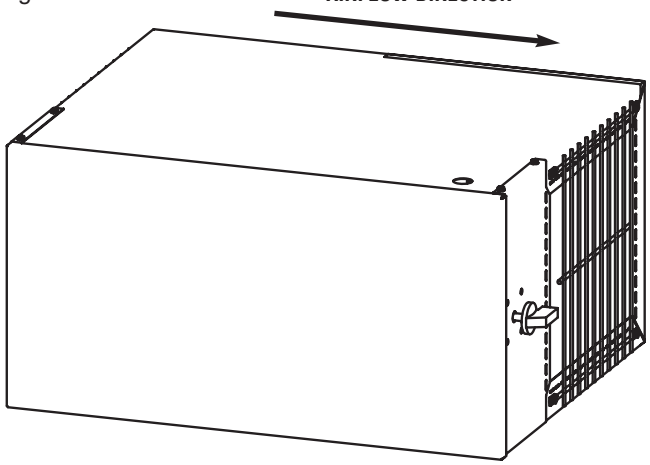

MOUNTING:

The PRH Series plenum heaters are intended to be mounted in the horizontal-right installation position (see Figure 2) and in a suspended manner. The unit can be rotated on its axis in any position needed (can not be mounted vertically). Suspend the unit from the building structure in a horizontal plane. Units must be independently supported. Support channels or straps are intended to be permanently attached to unit frame/housing. Be careful not to obstruct access to control panel with support channels or straps. **DUCT CONNECTIONS / DUCTING:**

The PRH Series plenum heaters may either be installed for free-air discharge or with a duct system. The proper sizing of warm air ducts is essential in providing satisfactory heating operation. Ductwork should be in accordance with the latest editions of NFPA-90B (Warm Air Heating and Air Conditioning Systems) or Canadian equivalent. Every PRH model is equipped with an inlet and outlet grille for free-air discharge. Both grilles are intended to be removed when connecting to a duct system. The inlet and outlet ends of the unit are equipped with perforated flanges to aid in forming both inlet and outlet duct flanges (see Figure 3).

Figure 3

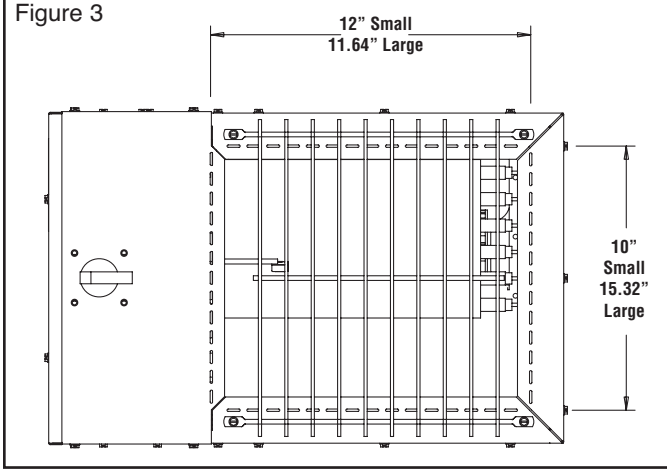

These perforations will aid in forming a rectangular inlet and outlet duct flange if they are desired for connection to the duct system. The unit is designed for a rectangular flange duct connecting and the clear area around the flange is intended for screw penetration. This feature aids in attaching the duct work to the unit so that the ductwork may be fastened and sealed to the unit.

CONTROL ACCESS:

The front door allows access to all the controls and components within the unit. The unit is design certified for 0" clearances however, while installing the unit, be careful not to obstruct access to this control panel. This panel allows access to the unit for making the power connection, the thermostat connection and is intended to allow access to all the internal components that make up the unit.

ELECTRICAL CONNECTIONS:

All field wiring must comply with NEC and local codes.

NOTE: SEE PAGE 3 & 4 FOR WIRING DIAGRAMS

All units are designed for a single point connection to supply power to the fan and electric heater. The PRH series plenum heaters are shipped standard with a 80 amp 3-pole disconnect switch. Field power connections are made to the line side of this disconnect switch (see Figure 4).

Figure 4

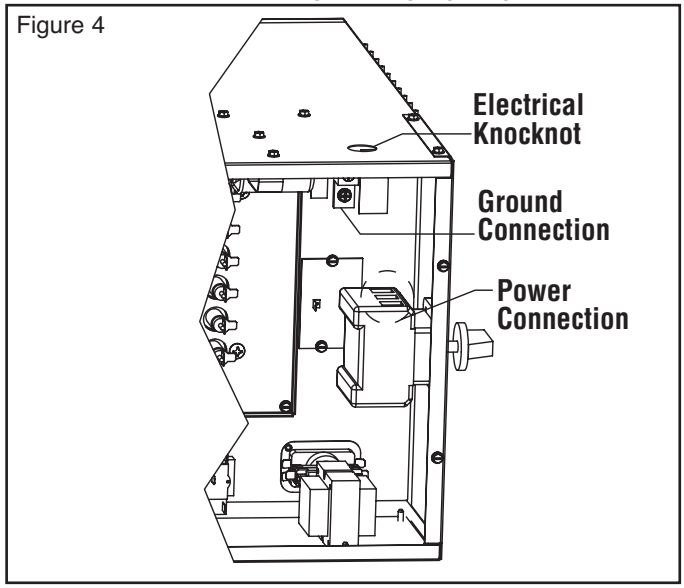

Each unit is equipped with a grounding lug for ground connection. The unit must be properly grounded to comply with NEC and local codes. Before making the power connection, insure that the line voltage to the unit matches the ratings located on the nameplate of the unit. All units should have copper wire sized for 125% of nameplate amperage. Disconnect the power supply before wiring the unit and insure the disconnect switch is in the OFF position while making power connections or servicing the unit. The unit cabinet has a 7/8" electrical knockout for routing power supply to the disconnect switch (see Specifications section for knockout location). Should the unit require a larger electrical conduit connection, this electrical knockout is intended to serve as the pilot hole in order to field convert to larger electrical connections.

CONTROL CONNECTIONS:

The PRH Series plenum heaters are designed to operate from a 24VAC thermostat. Model TH5220D1003 24V 2 stage thermostat is recommended to be used with the PRH Series heaters. Thermostat connections are made to the thermostat board located inside the unit. The thermostat label indicates which connections are (RGCW) for making these thermostat connections. The unit cabinet has a 3/8" knockout for routing thermostat wiring to the units thermostat board (see Specifications section for knockout location). Instructions for wiring the thermostat are packed with the thermostat. The unit is intended to operate with heat (W) and fan (G). If the unit is intended for cooling signals from the thermostat, make the Y connection from the thermostat to the G connection on the unit's thermostat board.

UNIT OPERATION:

The PRH Series plenum heaters are intended to be operated from a 24V thermostat. (Model TH5220D1003)

HEATING OPERATION

When there is a demand for heat, the thermostat sends a signal to the unit for this demand for heat. The unit's thermostat board will send power to the unit controls to initiate the heating operation. The call for heat makes the connection on the thermostat board by powering "W" with "R". Upon this demand for heat, the heating element starts heating and the fan on delay will power the fan within 60 seconds from the call for heat. The fan delay ensures that there will not be a cold blast of air to ensure comfort heating. When the heat demand has been met, the thermostat will send the signal back to the unit's thermostat board to stop the heating operation. This breaks the power connection between "R" to "W" and the heating element stops heating immediately. The fan off delay allows the fan to continue running to remove all residual heat from the heating element and will turn the fan off within 60 seconds. Should there be any abnormal conditions to cause the units limit to open during the call for heat, the units heat will turn off immediately but the fan will go through its normal off delay. During this open limit period, the power to the thermostat will be interrupted until the limit closes. This helps in determining abnormalities during heating operation by way of interrupting power to the thermostat.

FAN OPERATION

When there is a demand for fan, the thermostat sends a signal to the unit for this demand for fan. The unit's thermostat will send power to the unit controls to initiate the fan operation. The call for fan makes the connection on the thermostat board by powering "G" with "R". The fan will immediately come on and continue to run until the demand for fan has ended. When the fans demand has been met, the fan will immediately turn off. This breaks the power connection between "R" to "G".

HEATING OPERATION + FAN OPERATION

When there is a demand for both heat and fan at the same time, the heating element will come on immediately as well as the fan. The fan on delay will be bypassed. Upon completion of the demand for both heat and fan, the heating element will turn off immediately. However, the off delay will work the same as during the heating operation.

COOLING OPERATION

Should the unit be used for cooling, the "Y" connection from the thermostat should be connected to the "G" on the thermostat board. The cooling operation will operate like the fan operation above.

WIRING DIAGRAMS

Single Phase - Single Element

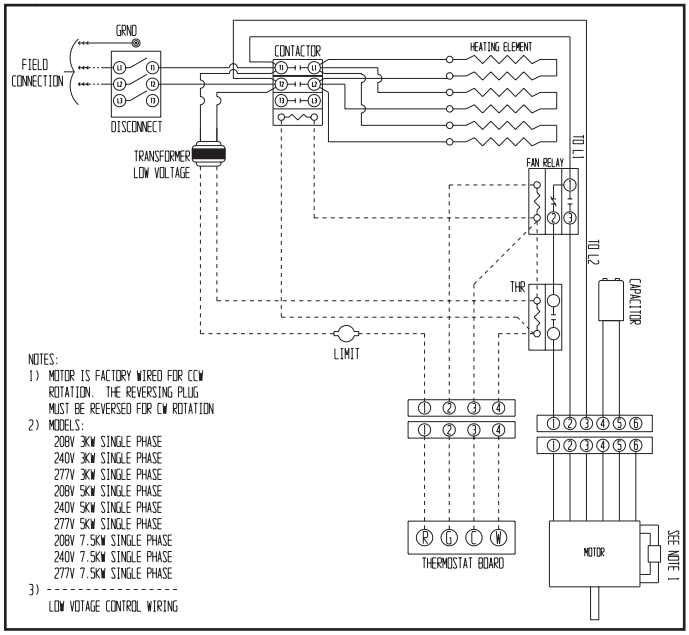

Three Phase - Single Element 480V

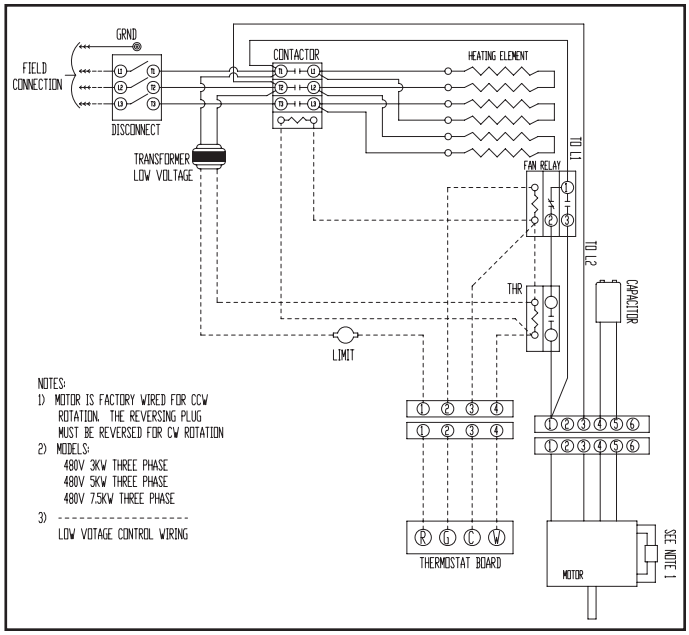

WIRING DIAGRAMS Cont.

Three Phase - Single Element

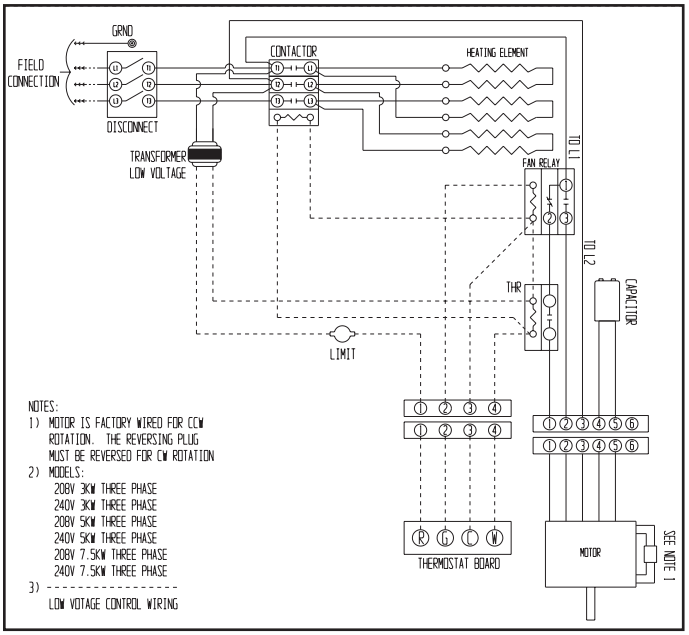

Single Phase - Dual Element

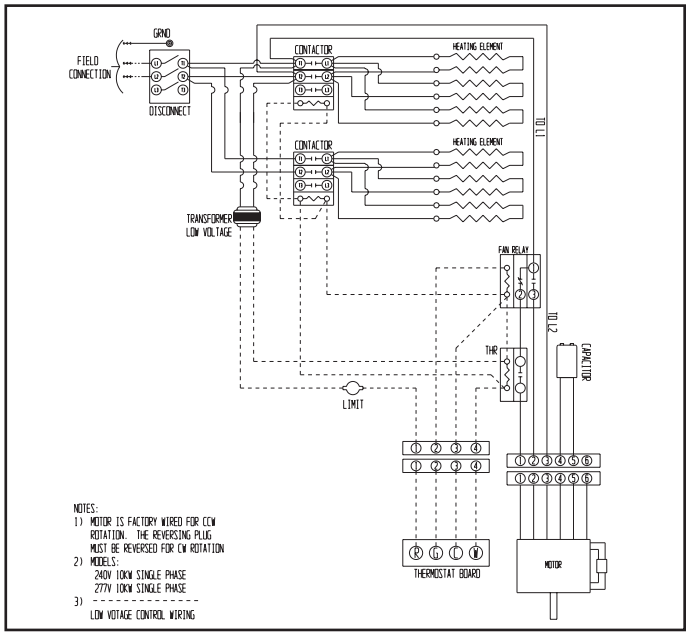

Three Phase - Dual Element 480V

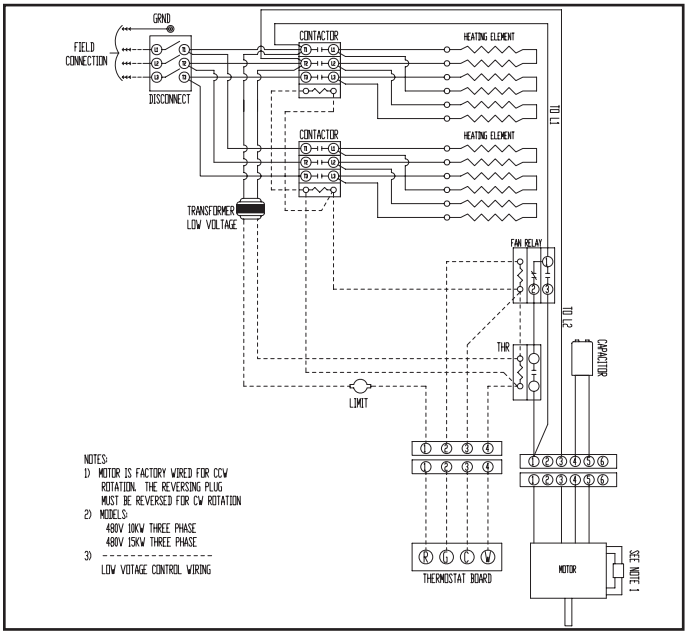

Three Phase - Dual Element

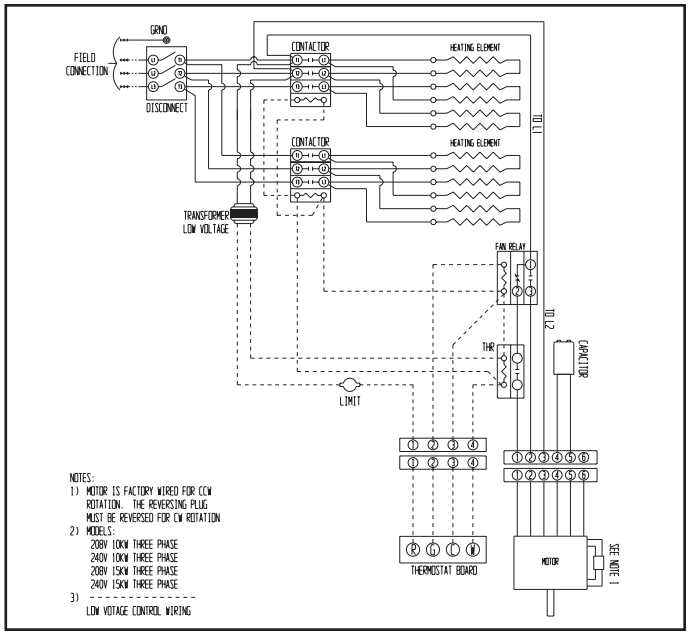

WIRING DIAGRAMS Cont.

Single Phase - 2 Stage Heat

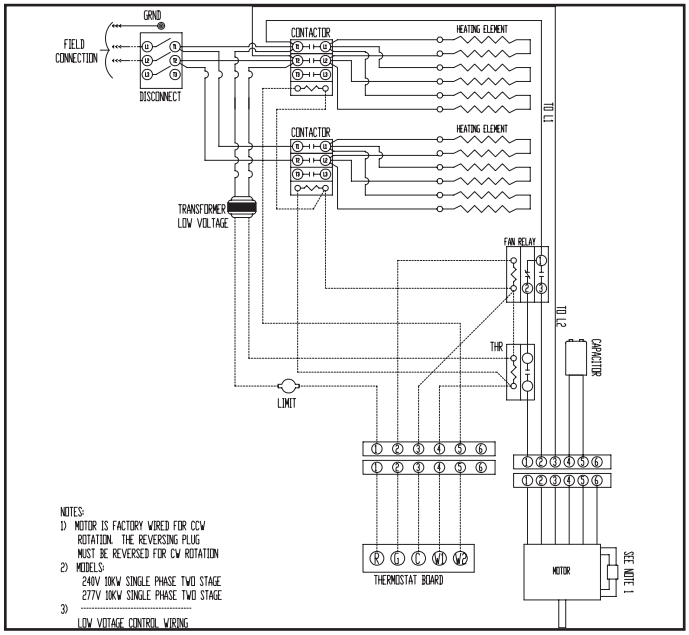

Three Phase - 2 Stage Heat 208V, 240V

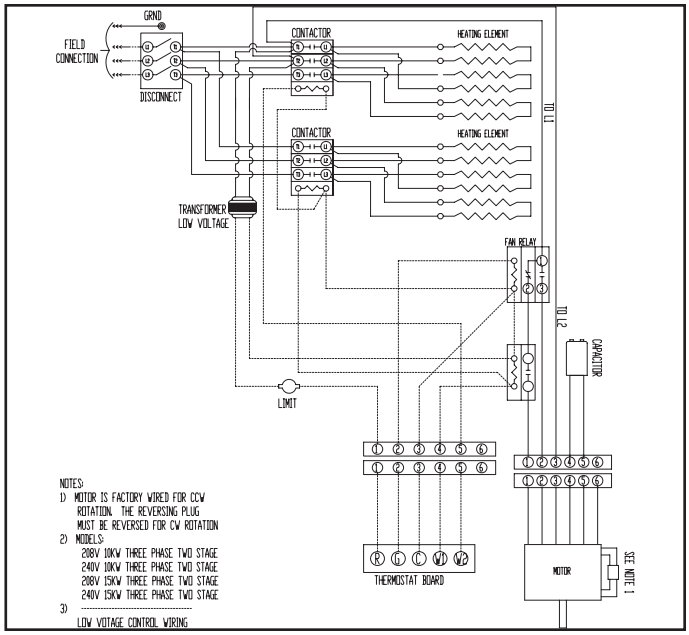

Three Phase - 2 Stage Heat 480V

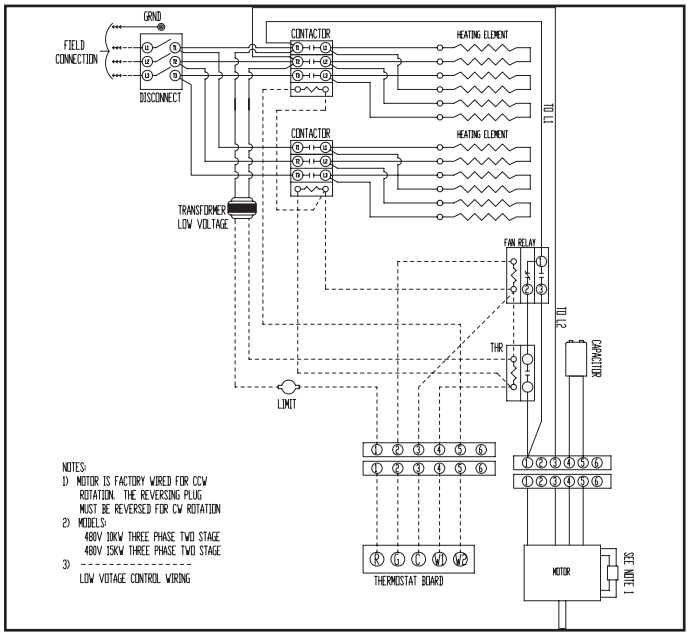

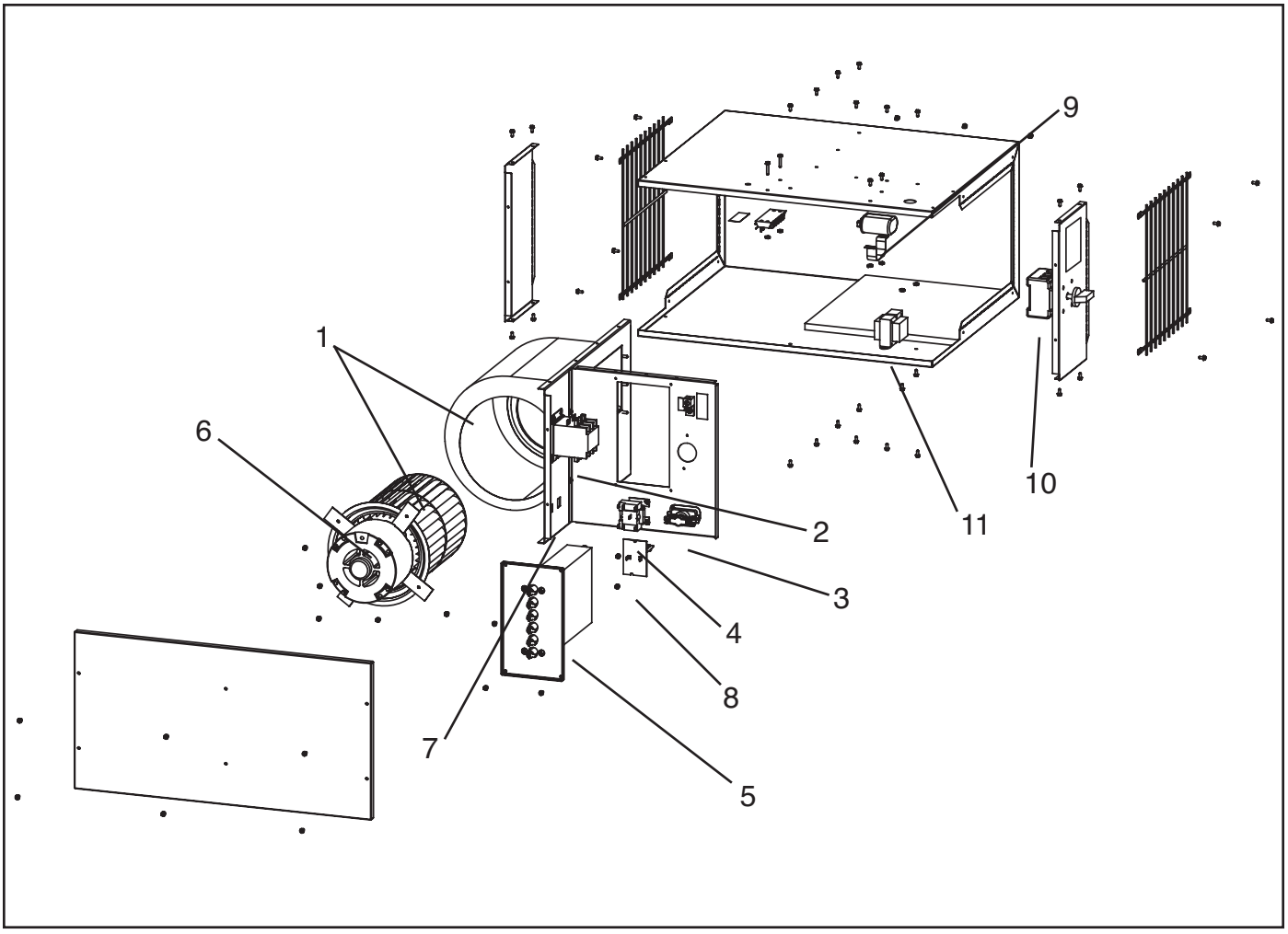

Replacement Parts

KEY	DESCRIPTION	3KW	5KW	7.5KW	10KW	15KW	QTY
1	Blower Assembly	1225-2022-000	1225-2022-000	1225-10158-000	1225-10158-000	1225-10158-000	1
2	Contactor / relay	5018-0005-004	5018-0005-004	5018-0005-004	5018-0005-004	5018-0005-004	1
3	Time Delay Relay	410171001	410171001	410171001	410171001	410171001	1
4	Fan Relay	5018-2024-000	5018-2024-000	5018-2024-000	5018-2024-000	5018-2024-000	1
5	Element						
	208V	302006850	302006804	302006809	302006804	302006809	1
	240V	302006851	302006852	854	302006852	854	1
	277V	302006838	302006840	855	302006840	855	1
	480V	302006853	302006807	302006810	302006807	302006810	1
6	Motor						
	208V	3900-2094-000	3900-2094-000	3900-10160-002	3900-10160-002	3900-10160-002	1
	240V	3900-2094-000	3900-2094-000	3900-10160-002	3900-10160-002	3900-10160-002	1
	277V	3900-2095-000	3900-2095-000	3900-10162-000	3900-10162-000	3900-10162-000	1
	480V	3900-10164-000	3900-10164-000	3900-10164-000	3900-10164-000	3900-10164-000	1
7	Motor Plug	6109-8090	6109-8090	6109-8090	6109-8090	6109-8090	1
8	Primary Limit Control	1414-2040-000	1414-2040-000	1414-2040-001	1414-2040-001	1414-2040-001	1
9	Capacitor	1432-0002-001	1432-0002-001	1432-0002-VAR	1432-0002-VAR	1432-0002-VAR	1
10	Disconnect Switch	5216-2039-000	5216-2039-000	5216-2039-000	5216-2039-000	5216-2039-000	1
11	Transformer						
	208-240V	5814-0003-000	5814-0003-000	5814-0003-000	5814-0003-000	5814-0003-000	1
	277-480V	5814-0003-001	5814-0003-001	5814-0003-001	5814-0003-001	5814-0003-001	1
	480V	5814-0003-002	5814-0003-002	5814-0003-002	5814-0003-002	5814-0003-002	1

Note: Use capacitor P/N 1432-0002-002 with motor P/N 3900-10160-002. All other motors will use capacitor P/N 1432-0002-001.

DIMENSIONS - SMALL CABINET

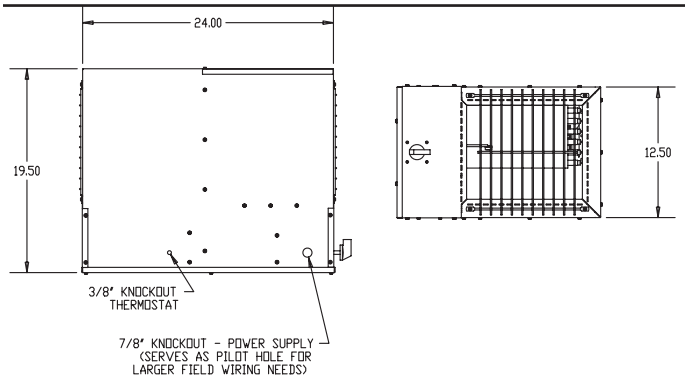

DIMENSIONS - LARGE CABINET

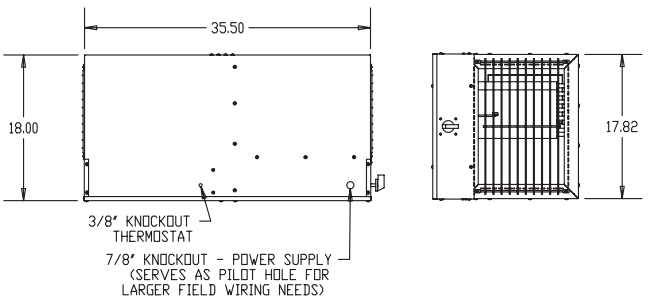

IMPORTANT INFORMATION

					LOW SPEED**		HIGH SPEED**		WT.	
CATALOG NUMBER	**PHASE**	**KW**	**VOLTAGE**	**AMPS***	**CFM**	**RISE**	**CFM**	**RISE**	**LBS**	**H X W X L**
PRH138124			208	15.32						
PRH132124	1	3	240	13.4						
PRH137124			277	11.63	350	27ºF	400	24ºF	49	12.5"x19.5"x24"
PRH138324			208	9.23						
PRH132324	3	3	240	8.12						
PRH134324			480	4.11						
PRH158124			208	24.94						
PRH152124	1	5	240	21.73						
PRH157124			277	18.85	350	45ºF	400	39ºF	49	12.5"x19.5"x24"
PRH158324			208	14.78						
PRH152324	3	5	240	12.93						
PRH154324			480	6.51						
PRH158124L			208	24.94						
PRH152124L	1	5	240	21.73						
PRH157124L			277	18.85	850	20ºF	1000	16ºF	49	18"x18"x35.5"
PRH158324L			208	14.78						
PRH152324L	3	5	240	12.93						
PRH154324L			480	6.51						
PRH1758124			208	38.12						
PRH1752124	1	7.5	240	33.31						
PRH1757124			277	28.91	850	28ºF	1000	24ºF	69	18"x18"x35.5"
PRH1758324			208	22.88						
PRH1752324	3	7.5	240	20.1						
PRH1754324			480	10.16						
PRH1102124	1	10	240	43.73		37ºF		31ºF		
PRH1107124			277	37.93						
PRH2102124	1	10	240	43.73	850	37º / 20ºF	1000	31º / 16ºF		
PRH2107124			277	37.93						
PRH1108324			208	29.82						
PRH1102324	3	10	240	26.12		37ºF		31ºF		
PRH1104324			480	13.17						
PRH2108324			208	29.82					69	18"x18"x35.5"
PRH2102324	3	10	240	26.12	850	37º / 20ºF	1000	31º / 16ºF		
PRH2104324			480	13.17						
PRH1158324			208	43.9						
PRH1152324	3	15	240	38.14	850	56ºF	1000	47ºFº		
PRH1154324			480	19.18						
PRH2152324	3	15	240	38.14	850	56º / 28ºF	1000	47º / 24ºF		
PRH2154324			480	19.18						

**Total Amps including Resistive and Inductive loads.*

***Low speed fan operation not available on 480V models.*
Low and High speed fan operation is determined during installation of thermostat set up

† Tested @0.2" S.P.

MAINTENANCE & REPAIR

Note: Periodic maintenance and repair should be performed by qualified personnel only.

1. Periodically inspect all electrical connections and terminals to avoid electrical wiring difficulties. Inspect all wiring for frayed or worn insulation.
2. Periodically and before each heating season, clean the steel finned elements and fan inlet with compressed air, vacuum, or feather brush. Be sure all electrical covers are tightly closed.
3. If heat output seems to be low, check amperage draw on each element leg. Compare measured values to the correct currents as listed on the unit nameplate.
4. The thermally protected fan motor is permanently lubricated and sealed. No field servicing is required unless needed. Replace only with a factory supplied identical motor or blower.
5. Check blower rotation to be sure that no is inside blower housing.

TROUBLE SHOOTING

Problem	Potential Cause	Solution
1. Motor does not operate.	> Fan delay not operating and /or connected.	> Check connections
	> Disconnect switch is open	> Energize circuit
	> Blower motor damaged	> Verify and relace if necessary
	> No power supply	> Verify and energize circuit
	> Blocked blower wheel	> Verify and unblock wheel for proper rotation
2. Heat not working.	> Heating elements are not energized	> Check connections and operation
	> Electical components may be open	> Check disconnect, fuses, and circuit breaker
	> Fan delay not connected.	> Check connections
	> Safety thermal limits opened	> Check, verify and replace if necessary
	> Incorrect wattage or voltage of element	> Verify and replace if necessary
	> Thermostat setting too low	> Rotate dial clockwise to a higher setting
3. Airflow is insufficient.	> Air filters restriction airflow	> Check, clean, and or replace filters
	> Blocked blower wheel	> Verify and unblock wheel for proper rotation.

LIMITED WARRANTY

All products manufactured by Marley Engineered Products are warranted against defects in workmanship and materials for one year from date of installation, except heating elements which are warranted against defects in workmanship and materials for five years from date of installation. This warranty does not apply to damage from accident, misuse, or alteration; nor where the connected voltage is more than 5% above the nameplate voltage; nor to equipment improperly installed or wired or maintained in violation of the product's installation instructions. All claims for warranty work must be accompanied by proof of the date of installation.

The customer shall be responsible for all costs incurred in the removal or reinstallation of products, including labor costs, and shipping costs incurred to return products to Marley Engineered Products Service Center.Within the limitations of this warranty, inoperative units should be returned to the nearest Marley authorized service center or the Marley Engineered Products Service Center, and we will repair or replace, at our option, at no charge to you with return freight paid by Marley. It is agreed that such repair or replacement is the exclusive remedy available from Marley Engineered Products.

THE ABOVE WARRANTIES ARE IN LIEU OF ALL OTHER WARRANTIES EXPRESSED OR IMPLIED, AND ALL IMPLIED WARRANTIES OF MERCHANTABILITY AND FITNESS FOR A PARTICULAR PURPOSE WHICH EXCEED THE AFORESAID EXPRESSED WARRANTIES ARE HEREBY DISCLAIMED AND EXCLUDED FROM THIS AGREEMENT. MARLEY ENGINEERED PRODUCTS SHALL NOT BE LIABLE FOR CONSEQUENTIAL DAMAGES ARISING WITH RESPECT TO THE PRODUCT, WHETHER BASED UPON NEGLIGENCE, TORT, STRICT LIABILITY, OR CONTRACT.

Some states do not allow the exclusion or limitation of incidental or consequential damages, so the above exclusion or limitation may not apply to you. This warranty gives you specific legal rights, and you may also have other rights which vary from state to state.

For the address of your nearest authorized service center, contact Marley Engineered Products in Bennettsville, SC, at 1-800-642-4328. Merchandise returned to the factory must be accompanied by a return authorization and service identification tag, both available from Marley Engineered Products. When requesting return authorization, include all catalog numbers shown on the products.



470 Beauty Spot Rd. East
Bennettsville, SC 29512 USA

Part No. 5200-2834-004
ECR 38777
07/10