BHRA66 SERIES

HEATER COMMERCIAL WALL MOUNT





IDEAL SPACES

- Indoor Workshops
- Garages
- Indoor/Outdoor Patios/Terraces
- Restaurants
- Bus Stops
- Golf Ranges
- Valets
- Swimming Pools
- Sports and Fitness Areas
- Shipping/Loading Areas

COLORS

- Gloss Black

DIMENSIONS

- 20-1/16"L x 6-1/4"W x 8-1/2"H

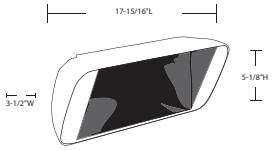

COVERAGE AREA

- 300 SF

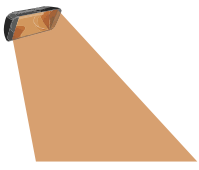

- Soft, efficient comfort: heat people and objects not the air for optimal energy efficiency
- Energy savings: provides a low cost energy efficient alternative to propane/gas heat
- Uniform, localized heating: provides instant, fully directional space heating
- Clean, safe comfort: no moving air/parts, no dust, no combustion, no fumes
- IPX5-rated; contemporary all-weather design
- Low maintenance with no moving parts or filters, minimal servicing needed

Intertek

60 DAYS WARRANTY ELEMENT

2 YEAR WARRANTY WORKMANSHIP

BHRA66 SERIES
INFRARED

MODELS & SPECIFICATIONS								
CATALOG NO.	UPC NUMBER	COVERAGE AREA[1]	VOLTS	AMPS	WATTS	BTU/HR	DIMENSIONS	SHIP WT. (LBS)
BHRA66420B	6 85360 16363 5	300 SF	240	8.45	2000	6824	20-1/16" x 6-1/4" x 8-1/12"	6.6

NOTE: [1] May need multiple units for specific area. Consult MEP technical services for more information on Infrared System Design.

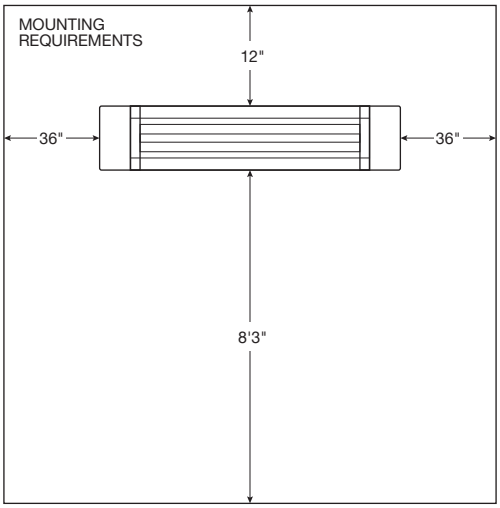





BERKO®
A Marley Engineered Products Brand