BERKO®
A Marley Engineered Products Brand
470 Beauty Spot Rd. E
Bennettsville, SC 29512

SUBMITTAL SHEET
ASL3 & ASL5 SERIES
ARCHITECTURAL SILL-HEIGHT CONVECTOR

See Selection Chart for Options

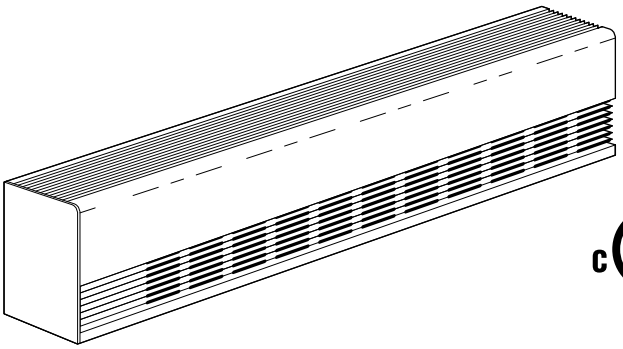

JOB NAME: _____

LOCATION: _____

ARCHITECT: _____

ENGINEER: _____

CONTRACTOR: _____

SUBMITTED BY: _____ DATE: _____

TAG/ITEM	QTY.	CATALOG NUMBER	HEATER			AMPS	LENGTH	NUMBER OF ELEMENTS	BUILT-IN CONTROLS
			KW	VOLTS	Ø				

ACCESSORIES AND CONTROLS	TAG/ITEM	QTY.	CATALOG NUMBER	DESCRIPTION

SUBMITTED BY:	DATE

APPROVED BY:	DATE

ASL3 & ASL5 SERIES

ARCHITECT'S AND ENGINEER'S SPECIFICATIONS*

Furnish and install, where indicated on plans, ASL Series Series convector type heaters, suitable for continuous operation, as manufactured by Berko,® A Division of Marley Engineered Products,® Bennettsville, SC.

ENCLOSURE: Shall be 12-gauge (.080" min.) aluminum extrusion (ASL3) or 10-gauge (.095" min.) aluminum extrusion (ASL5). The one-piece top and bottom shall join to the one-piece top and front utilizing Berko's Snap-Lock design. Both inlet and outlet air grilles shall be punched pencil-proof slots negating the need for mesh under the grille.

SIZE: Heaters shall be low profile (3 ⅝" x 6" or 5 ⅜" x 7") and available in standard lengths from 28 inches through 12 feet. Additionally, custom length cabinets available with single or multiple heat decks shall be furnished as specified.

HEATING LENGTHS AND VOLTAGES: Heater lengths, voltages and wattage capacities shall be as indicated on the plans.

FINISH: The top and front shall be finished with a baked enamel paint or anodized. Finished backs are available upon request.

HEATING ELEMENTS: The nickel-chromium heating element wire shall be encased in a steel sheath for maximum, trouble-free element life. Aluminum fins shall be pressure bonded to the steel sheath. Elements shall be centered, anchored and shall float freely at each end through high-temperature Noryl bushings. The ASL5 shall utilize Berko's "Stair-Step" element arrangement.

CONTROL SECTIONS: Control sections, finished to match heaters, shall be furnished as an optional accessory for field installation of controls, or shall be used to house factory-installed controls as specified.

OPTION BUILT-IN CONTROLS: Thermostats, power relay, low-voltage control relays, and power on/off switches, singly or in combination, may be specified for factory installation in heaters. Thermostats and power on/off switches are accessible through the grille.

PEDESTALS: The heater shall be convertible for use as a self-standing unit with pedestal conversion kit. Pedestals shall be painted steel or anodized aluminum. Pedestals can either be mounted on or embedded in the floor surface, and wiring or conduit brought through the pedestal during installation.

*Berko *reserves the right to change specifications without prior notice.*

Dimensions and Clearances:

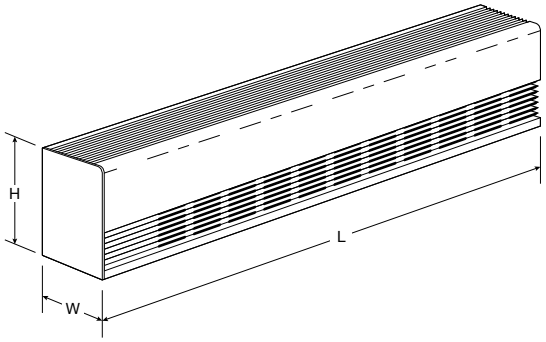

	Dimensions		
Cat. No.	H	W	L
ASL3	6"	3 ⅝"	28"–12'
ASL5	7"	5 ⅝"	28"–12'

Minimum Mounting Height Above Floor	
ASL3 & ASL5 Front Inlet	0"
ASL3 & ASL5 Bottom Inlet (100W/Ft.-250W/Ftr.)	1–3/4"
ASL5 Bottom Inlet (375W/Ft.-750W/Ft.)	3"

Knockouts:

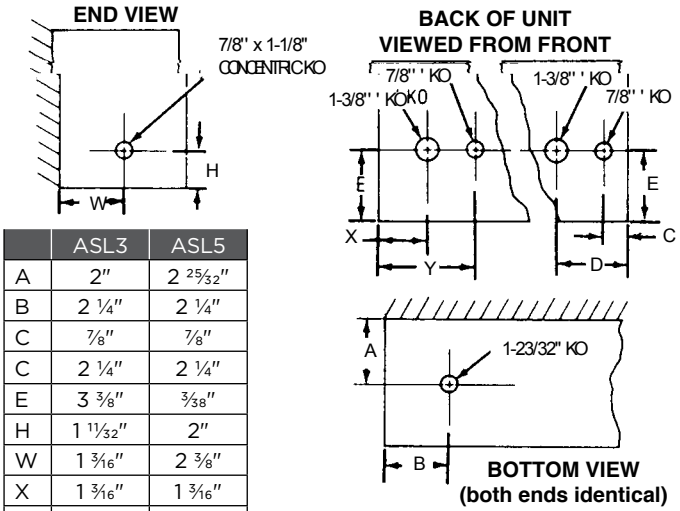

	ASL3	ASL5
A	2"	2 25/32"
B	2 ¼"	2 ¼"
C	⅞"	⅞"
C	2 ¼"	2 ¼"
E	3 ⅜"	⅜"
H	1 11/32"	2"
W	1 3/16"	2 ⅜"
X	1 3/16"	1 3/16"
Y	2 9/16"	2 9/16"

Pedestal Placement:

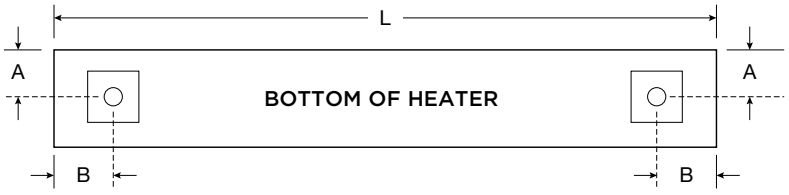

	Standard Pedestal Placement		
Cat. No.	A	B	L
ASL3	2"	2 ¼"	28–12"
ASL5	2 13/16"	2 ¼"	28–12"

NOTE: On units longer than 12', three pedestals are required. Consult factory for placement.

Approvals: _____ _____ _____

ASL3 & ASL5 (1 Element) Lengths

Length	28″	3′	4′	5′	6′	7′	8′	9′	10′
Shipping Weight	8 lbs	10 lbs	13 lbs	17 lbs	20 lbs	24 lbs	27 lbs	30 lbs	33 lbs

NOTE: Custom length cabinets are priced with heater and blank to the next larger size. Backs are provided standard with no finish. For finished backs, add 10% to list price. Knockouts on back omitted by request only. All models are NON-STOCK made-to-order. When ordering, specify quantity, catalog number, voltage, wattage, optional controls, and color. Consult sales representative for lead times.

Watts per Ft.*

100	125	150
188	250	

Voltages*

120	208	240	277
480	347	600	

ASL5 (Multiple Elements) Lengths

Length	28″	3′	4′	5′	6′	7′	8′	9′	10′
Shipping Weight	12 lbs	15.5 lbs	20 lbs	25.5 lbs	30 lbs	35 lbs	40 lbs	45 lbs	50 lbs

NOTE: Cabinet available up to 12 ft. length. Custom length cabinets are priced with heater and blank to the next larger size. Backs are provided standard with no finish. For finished backs, add 10% to list price. Knockouts on back omitted by request only. All models are NON-STOCK made-to-order. When ordering, specify quantity, catalog number, voltage, wattage, optional controls, and color. Consult sales representative for lead times.

Watts per Ft. — 2 Elements*

375	500

Voltages — Single Phase*

208	240	277	347	600

Watts per Ft. — 3 Elements *

600	750

Voltages — Three Phase*

208	240	600

*Specs vary by length. Reference the submittal sheet or additional detail

Optional Built-In Controls:

SUFFIX*	OPTIONAL BUILT-IN CONTROL	RATINGS & DESCRIPTION
T	Single-Pole Thermostat	Rated 25 amps @ 120-240 VAC and 22 amps @ 277 VAC. Pilot duty rating of 125 VA (all voltages). 60–120°F temperature range; adjustable through outlet grille-tamper-resistant. (See Note B) Not available on three-phase heaters.
2T	Double-Pole Thermostat	Rated 25 amps @ 120-240 VAC and 22 amps @ 277 VAC. Pilot duty rating of 125 VA (all voltages). 60–120°F temperature range; adjustable through outlet grille-tamper-resistant. (See Note B for amperage restrictions.)
DS	Power On/Off Switch	Double-pole, rated 20 amp @ 120-277 VAC. (See Note A) For three-phase heaters and single-phase heaters over 20 amps specify two.
TR	Transformer Relay	Single-pole, low voltage relay with built-in transformer (24 VAC control), rated 22 amps @ 120–240 VAC and 22 amps @ 277 VAC. (See note E) 17 amps @ 347V. Not available on three-phase heaters.
PR	Power Relay	Single-pole thermal time delay relay, rated 25 amps @ 120–600 VAC. (See Notes E & F). Specify control voltage.
2ST	2-Stage Thermostat	Rated 24 amps @ 120–240 VAC and 22 amps @ 277 VAC. Pilot duty rating of 125 VA (all voltages). 60–120°F temperature range, adjustable through outlet grille-tamper-resistant. Available on 2- or 3-element, single-phase heaters only.
PDT	Single-Pole Thermostat	Same as -T except Pilot Duty. (See Note C)
2TPD	Double-Pole Thermostat	Same as -2T except Pilot Duty. (See Note C & D)
M	Outlet Mesh	Price per foot

NOTE: * Addition To Basic Catalog No. (See Note D)
A. For single-phase loads over 20A and all three-phase loads, specify (2) power on/off switches. **B**. This control option is not available on single-phase heaters over 25 amps (22 amps on 277 VAC). In combination with the power on/off switch option use the 2ST thermostat option on heaters over 20 amps. **C**. A second transformer relay can be sequenced off the first transformer relay in the same heater. Up to 30 power relays in different heaters can be controlled by (1) single-stage pilot duty thermostat. **D**. Up to 30 power relays in different heater can be controlled by each stage of a two-stage pilot duty thermostat. **E**. Two relays are required on single-phase heaters over 20 amps with a power on/off switch, over 25 amps without a power on/off and on all three-phase heaters. Two relays are available for two-stage on two- or three-element heaters only. **F**. Three power relays are available for three-stage on three-element heaters only.

Control Combinations:

		No Thermostat or Power ON/OFF Switch	Thermostats					Power ON/OFF (*-DS*)[4]	Thermostats & Power ON/OFF Switches				
			1-Pole (*-T*)	2-Pole (*-2ST*)	2-Stage (*-2ST*)	Pilot Duty (*-PDT*)[2]	2-Stage Pilot Duty (*-2SPD*)[2]		1-Pole	2-Pole	2-Stage	Pilot Duty	2-Stage Pilot Duty
ASL3	No Power Controls	x	x	x				x	x	x			
ASL3	Power Relay (*-PR*)	x	x	x		x		x	x	x		x	
ASL3	Transformer Relay (*-TR*)	x	x	x		x		x	x	x		x	
ASL5	No Power controls	x	x	x	x	x	x	x	x	x	x		
ASL5	Power Relay (*-PR*)	x	x	x	x	x	x	x	x	x	x	x	
ASL5	2 Power Relays (*2-PR*)	x		x	x	x	x	x		x	x	x	x
ASL5	3 Power Relays (*-3PR*)	x		x	x	x	x	x		x	x	x	x
ASL5	Transformer Relay (*-TR*)	x	x	x	x	x		x	x	x	x	x	
ASL5	2 Transformer Relays (*-2TR*)	x		x[3]	x[3]	x[3]	x[3]	x[3]		x[3]	x[3]	x[3]	

NOTE: **1**. Normal mounting configuration is a thermostat and Power ON/OFF in left junction box; power relay, transformer relay, and pneumatic/electric switch in right junction box. **2**. When used with power relays or transformer relays, pilot duty thermostats will be wired into the coil circuit of the power relay or the 24V side of the transformer relay. The line voltage thermostats will be wired into the power circuit of the heater. **3**. When using two transformer relays with any additional controls (built-in thermostat or Power ON/OFF), please consult factory. **4**. For three-phase units, specify two Power ON/OFF.

Approvals: _____ _____ _____

Blank Sections & Accessories — ASL3 Series:

CATALOG NO.	DIMENSIONS (W x H x L)	INLET	SHIP WT.
ASL3BS1F	3 ⅝″ x 6″ x 1′	Front	4 lbs
ASL3BS1B		Bottom	
ASL3BS2F	3 ⅝″ x 6″ x 28″	Front	7 lbs
ASL3BS2B		Bottom	
ASL3BS3F	3 ⅝″ x 6″ x 3′	Front	9 lbs
ASL3BS3B		Bottom	
ASL3BS4F	3 ⅝″ x 6″ x 4′	Front	12 lbs
ASL3BS4B		Bottom	
ASL3BS5F	3 ⅝″ x 6″ x 5′	Front	16 lbs
ASL3BS5B		Bottom	
ASL3BS6F	3 ⅝″ x 6″ x 6′	Front	19 lbs
ASL3BS6B		Bottom	
ASL3BS7F	3 ⅝″ x 6″ x 7′	Front	22 lbs
ASL3BS7B		Bottom	
ASL3BS8F	3 ⅝″ x 6″ x 8′	Front	24 lbs
ASL3BS8B		Bottom	
ASL3BS9F	3 ⅝″ x 6″ x 9′	Front	27 lbs
ASL3BS9B		Bottom	
ASL3BS10F	3 ⅝″ x 6″ x 10′	Front	30 lbs
ASL3BS10B		Bottom	

NOTE: Blank section grilles are not punched unless requested.

CATALOG NO.	DESCRIPTION	ADDITIONAL SPACE REQUIRED	SHIP WT.
ASL3ECLS	End Cap w/Screws — Left		
ASL3ECRS	End Cap w/Screws — Right		
ASL3ICF	Inside Corner-Front In	8 ½″	5 lbs
ASL3ICB	Inside Corner-Bottom In	8 ½″	5 lbs
ASL3OCF	Outside Corner-Front In	5″	4 lbs
ASL3OCB	Outside Corner-Bottom In	5″	4 lbs
ASL3135ICF	135° Inside Corner-Front In	8 ½″	5 lbs
ASL3135ICB	135° Inside Corner-Bottom In	8 ½″	5 lbs
ASL3135OCF	135° Outside Corner-Front In	5″	4 lbs
ASL3135OCB	135° Outside Corner-Bottom In	5″	4 lbs
ASL3DESBL	Dec. End Section-Bottom In, Left	9 ⅝₄″	5 lbs
ASL3DESBR	Dec. End Section-Bottom In, Right		5 lbs
ASL3DESFL	Dec. End Section-Front In, Left		4 lbs
ASL3DESFR	Dec. End Section-Front In, Right		4 lbs
ASL3SP	Splice Plate	0–¼″	1 lbs
ASL3FL3	Filler Section 3 in.	0–3″	1 lbs
ASL3FL6	Filler Section 6 in.	3–6″	1 lbs
ASL3FL9	Filler Section 9 in.	6–9″	1 lbs
ASL3FL12	Filler Section 12 in.	9–12″	1 lbs
ASL3-FL18	Filler Section 18 in.	15–18″	1.5 lbs
ASL3DRF	Receptacle Section-Front In	4 ½″	1.5 lbs
ASL3DRB	Receptacle Section-Bottom In		
PK3S*	Standard Pedestal 2 ⅞ in. (H)	—	2 lbs
PK3A*	Architectural Pedestal 2 ⅞ in. (H)	—	2 lbs
SO1A***	Stand-Off Bracket	—	1 lbs

*One pedestal. Two required on units up to 10 ft., three required on units over 10ft.

**Add suffix -P for painted followed by the color code (i.e. W for White, B for Black, etc.), -C for clear anodized (excludes PK3S—Black only).

***All Stand-off Brackets come standard as Beige.



SPLICE/
FILLER

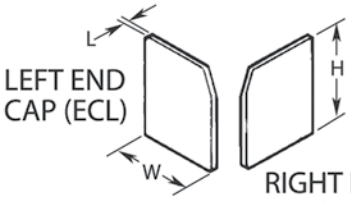

LEFT END
CAP (ECL)

RIGHT END
CAP(ECR)

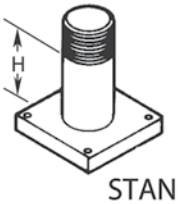

STANDARD
PEDESTAL
LEG

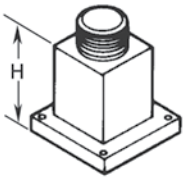

ARCHITECTURAL
PEDESTAL
LEG

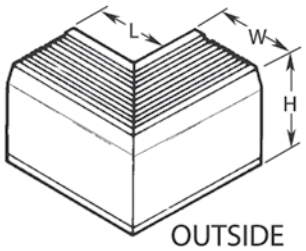

OUTSIDE
CORNER (OC)
BITO

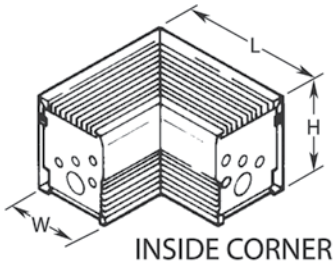

INSIDE CORNER
(IC) FITO

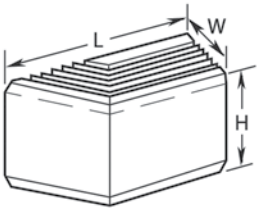

DIAGONAL
END SECTION

Approvals: _____ _____ _____

How to Order - ASL3

Example:

ASL3	04	250	F	27	S	MM	R	2T	D	0	X	0	0	0	12345

- 5 digit serial #
- Outlet Mesh Mesh: **0** = None, **M** = Mesh
- **0**
- Duplex Receptacle: **0** = None, **R** = Receptacle
- Transformer Relay (provides 24VAC power for external wall stat): **0** = None, **X** = Transformer Relay
- Power Relay (requires external voltage): **0** = None, **1** = 120VAC holding coil, **2** = 24VAC holding coil
- Disconnect Switch: **0** = None, **D** = (1) two pole Disconnect Switch
- Thermostat: **0** = None, **T** = Single Pole Thermostat, **2T** = Double Pole Thermostat, **PD** = Pilot Duty Thermostat (requires PR or TR)
- Incoming Power Hand**: **R** = Right hand, **L** = Left hand
- Heater Finish/Color (Front/Back): **M** = Mill, **C** = Clear Anodized, **Z** = Bronze Anodized, **K** = Black Anodized, **G** = Charcoal Grey, **B** = Black, **A** = Aluminum, **S** = Bronze, **N** = Beige, **W** = White, **U** = Custom*
- Model: **ASL3**
- Nominal Heater Length: **02** = 2.3′ [28″], **03** = 2′+ - 3′, **04** = 3′+ - 4′, **05** = 4′+ - 5′, **06** = 5′+ - 6′, **07** = 6′+ - 7′, **08** = 7′+ - 8′, **09** = 8′+ - 9′, **10** = 9′+ - 10′, **11** = 10′+ - 11′, **12** = 11′+ - 12′
- Watts/ft: **100**, **125**, **150**, **188**, **250**
- Air Inlet: **F**= Front Inlet, **B** = Bottom Inlet
- Voltage (Single Phase Only): **12** = 120V, **20** = 208V, **22** = 220V, **24** = 240V, **27** = 277V, **34** = 347V, **60** = 600V
- Layout: **S** = Standard layout units—Heat Deck, and control locations determined by the factory. **C** = Custom layout units—Heat Deck locations determined by Rep. using custom layout form. Control Location must be accounted for. See notes.

*Custom finishes require additional approvals prior to acceptance

**Control Hand / Incoming Power connection is determined by the hand of the DS/ thermostat when facing the heater.

Contact Marley Sales Representative for additional configuration details

Approvals: _____ _____ _____

Blank Sections & Accessories — ASL5 Series:

CATALOG NO.	DIMENSIONS (W x H x L)	INLET	SHIP WT.
ASL5BS1F	5 ⅜″ x 7″ x 1′	Front	7 lbs
ASL5BS1B		Bottom	
ASL5BS2F	5 ⅜″ x 7″ x 28″	Front	11 lbs
ASL5BS2B		Bottom	
ASL5BS3F	5 ⅜″ x 7″ x 3′	Front	14 lbs
ASL5BS3B		Bottom	
ASL5BS4F	5 ⅜″ x 7″ x 4′	Front	18 lbs
ASL5BS4B		Bottom	
ASL5BS5F	5 ⅜″ x 7″ x 5′	Front	22 lbs
ASL5BS5B		Bottom	
ASL5BS6F	5 ⅜″ x 7″ x 6′	Front	27 lbs
ASL5BS6B		Bottom	
ASL5BS7F	5 ⅜″ x 7″ x 7′	Front	32 lbs
ASL5BS7B		Bottom	
ASL5BS8F	5 ⅜″ x 7″ x 8′	Front	37 lbs
ASL5BS8B		Bottom	
ASL5BS9F	5 ⅜″ x 7″ x 9′	Front	40 lbs
ASL5BS9B		Bottom	
ASL5BS10F	5 ⅜″ x 7″ x 10′	Front	44 lbs
ASL5BS10B		Bottom	

NOTE: Blank section grilles are not punched unless requested.

CATALOG NO.	DESCRIPTION	ADDITIONAL SPACE REQUIRED	SHIP WT.
ASL5ECLS	End Cap w/Screws — Left		
ASL5ECRS	End Cap w/Screws — Right		
ASL5ICF	Inside Corner-Front In	10″	11 lbs
ASL5ICB	Inside Corner-Bottom In	10″	11 lbs
ASL5OCF	Outside Corner-Front In	5″	7 lbs
ASL5OCB	Outside Corner-Bottom In	5″	7 lbs
ASL5135ICF	135° Inside Corner-Front In	10″	11 lbs
ASL5135ICB	135° Inside Corner-Bottom In	10″	11 lbs
ASL5135OCF	135° Outside Corner-Front In	5″	7 lbs
ASL5135OCB	135° Outside Corner-Bottom In	5″	7 lbs
ASL5DESBL	Dec. End Section-Bot. In, Left	12 ½′	11 lbs
ASL5DESBR	Dec. End Section-Bot. In, Right		11 lbs
ASL5DESFL	Dec. End Section-Front In, Left		7 lbs
ASL5DESFR	Dec. End Section-Front In, Right		7 lbs
ASL5SP	Splice Plate	0—¼″	1 lbs
ASL5FL3	Filler Section 3 in.	0—3″	1 lbs
ASL5FL6	Filler Section 6 in.	3—6″	1 lbs
ASL5FL9	Filler Section 9 in.	6—9″	2 lbs
ASL5FL12	Filler Section 12 in.	9—12″	3 lbs
ASL5-FL18	Filler Section 18 in.	15—18″	5 lbs
ASL5DRF	Receptacle Section-Front In	4 ½″	2 lbs
ASL5DRB	Receptacle Section-Bottom In		
PK5S*	Standard Pedestal 4 ⅛ in. (H)	—	2 lbs
PK5A*	Architectural Pedestal 4 ⅛ in. (H)		
SO1A	Stand-Off Bracket	—	1 lbs

*One pedestal. Two required on units up to 10 ft., three required on units over 10ft.
**Add suffix -P for painted followed by the color code (i.e. W for White, B for Black, etc.), -C for clear anodized, -B for bronze anodized (excludes PK5S—Black only).
***All Stand-off Brackets come standard as Beige.

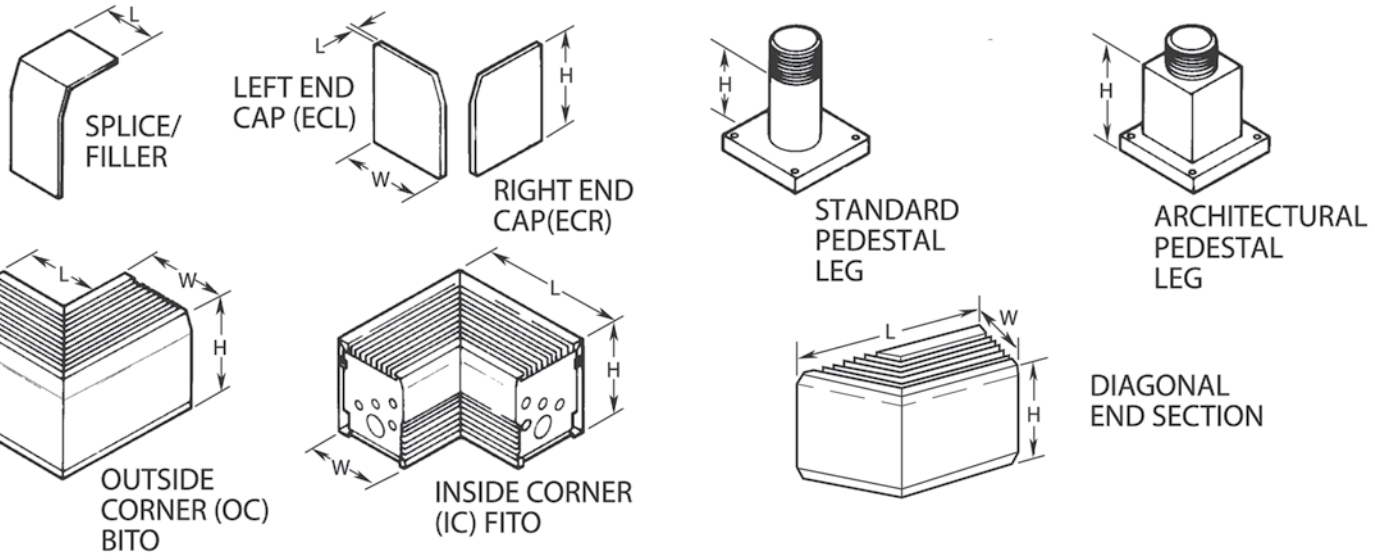

Approvals: _____ _____ _____

How to Order - ASL5

Example:

ASL5	04	250	F	271	S	MM	R	2T	D	0	X	0	0	0	12345

Model: **ASL5**

Nominal Heater Length: **02** = 2.3′ [28″], **03** = 2′+ - 3′, **04** = 3′+ - 4′, **05** = 4′+ - 5′, **06** = 5′+ - 6′, **07** = 6′+ - 7′, **08** = 7′+ - 8′, **09** = 8′+ - 9′, **10** = 9′+ - 10′, **11** = 10′+ - 11′, **12** = 11′+ - 12′

Watts/ft: **100**, **125**, **150**, **188**, **250**, **375**, **500**, **600**, **750**

Air Inlet: **F**= Front Inlet, **B** = Bottom Inlet

Voltage & Phase: **121** = 120V-1ph, **201** = 208V-1ph, **203** = 208V-3ph, **241** = 240V-1ph, **243** = 240V-3ph, **271** = 277V-1ph, **341** = 347V-1ph, **601** = 600V-1ph, **603** = 600V-3ph

Layout: **S** = Standard layout units—Heat Deck, and control locations determined by the factory. **C** = Custom layout units—Heat Deck locations determined by Rep. using custom layout form. Control Location must be accounted for. See notes.

Heater Finish/Color (Front/Back): **M** = Mill, **C** = Clear Anodized, **Z** = Bronze Anodized, **K** = Black Anodized, **G** = Charcoal Grey, **B** = Black, **A** = Aluminum, **S** = Bronze, **N** = Beige, **W** = White, **U** = Custom*

Incoming Power Hand**: **R** = Right hand, **L** = Left hand

Thermostat: **0** = None, **T** = Single Pole Thermostat, **2T** = Double Pole Thermostat, **PD** = Pilot Duty Thermostat (requires TR), **2S** = 2 Pole Stat wired 2 stage, **2P** = 2 Stg Pilot Duty Thermostat (requires TR, PR)

Disconnect Switch: **0** = None, **D** = (1) two pole Disconnect Switch, **2** = (2) two pole Disconnect Switch

Power Relay (requires external voltage): **0** = None, **1** = 120VAC holding coil, **2** = 24VAC holding coil, **L** = Line Voltage (same as Htr)

Transformer Relay (provides 24VAC power for external wall stat): **0** = None, or relay for Pilot Duty, **X** = Transformer Relay

Duplex Receptacle: **0** = None, **R** = Receptacle

0

Outlet Mesh: **0** = None, **M** = Mesh

5 digit serial #

*Custom finishes require additional approvals prior to acceptance

**Control Hand / Incoming Power connection is determined by the hand of the DS/ thermostat when facing the heater.

Contact Marley Sales Representative for additional configuration details

No matter the industry or application, Marley Engineered Products has a robust portfolio of innovative, reliable, high-performance comfort heating and ventilation solutions for all your heating needs.

For more information or assistance on your next project, contact Technical Services at 800-642-4328

Scan the QR code to access additional specs and features

Approvals: _____ _____ _____