AIR CIRCULATOR; FAN HEAD
MODELS: 24ACH, 30ACH, 24ACH-0, 30ACH-0, MACH-24, MACH-30, HD24-H, HD20-H & AF30-H

READ AND SAVE THESE INSTRUCTIONS

WARNING: To reduce the risk of fire and shock, do not use this fan with a solid state speed control device.

WARNING: To reduce the risk of fire, electric shock, or injury to person, observe the following:

a.)Use this unit only in the manner intended by the manufacturer. If you have questions, contact the manufacturer.

b.)Before servicing or cleaning unit, switch power off at service panel and lock the service disconnection means to prevent power from being switched on accidentally. When the service disconnection means cannot be locked, securely fasten a prominent warning device, such as a tag to the service panel.

c.)Installation work and electrical wiring must be done by qualified person(s) in accordance with all applicable codes and standards, including fire rated construction.

d.)When cutting or drilling into walls or ceilings, do not damage electrical wiring and other hidden utilities.

CAUTION: Oscillating units must be disengaged prior to moving to prevent damage to the gear mechanism.

CAUTION: DO NOT install oscillating fans upside down as this may allow the fan to fall or become permanently damaged. Mount only as shown in this manual with the fan head on top of the bracket.

CAUTION: **DO NOT use an extension cord**
DO NOT oil motor; motor bearings are permanently lubricated
DO NOT put foreign objects through fan guard into blade

CAUTION: DO NOT move fan while blade is moving. Always turn fan off and let blade stop before attempting to move. DO NOT use blade guard to move fan

WARNING: To reduce the risk of fire, electric shock, and injury to persons, this Marley Engineered Products fan must be installed with Marley Engineered Products Mounts that are accordingly marked on their cartons to indicate the suitability with this model. Other mounts cannot be substituted. The approved Marley Engineered Products mounts for the above models are as follows:

- 2430PB Pedestal Mount = 24ACH, 30ACH, 24ACH-0, 30ACH-O, MACH-24, MACH-30
- 2430W-G Wall Mount = 24ACH, 30ACH, 24ACH-0, 30ACH-0, MACH-24, MACH-30
- 2430I I-Beam Mount =24ACH, 30ACH, MACH-24, MACH-30
- 2430C Ceiling Mount = 24ACH, 30ACH, MACH-24, MACH30
- 2430S Suspension Mount = 24ACH, 30 ACH, MACH-24, MACH-30
- HDM-PB Pedestal mount = HD24-H, HD30-H, AF30-H
- HDY-W-Y Wall Mounts = HD24-H, HD30-H, AF30-H
- HDM-I I-Beam Mounts = HD24-H, HD30-H, AF30-H
- HDM-C Ceiling Mounts = HD24-H, HD30-H, AF30-H

OPERATING INSTRUCTIONS: Marley Engineered Products Air Circulators can be used alone, or in conjunction with air conditioning unit to circulate cool air or to force it into other areas. This Marley Engineered Products Air Circulator can also be used in the winter to force the warm air trapped near the ceiling, down toward the floor level for warming comfort.
NOTE: If your fan is experiencing vibration problems, please refer to the re-tracking instructions shown below.

CLEANING: Disconnect power to the unit. Use a screw driver to remove the front guard from the rear guard by prying apart the hooks holding the two together. Use a damp cloth and mild detergent to clean the guards and the blade. Take care not to bend the blades. Use the same prying method to hook the guards back together.

RE-TRACKING OF FAN BLADE: Due to possible rough treatment to the blade during shipping, the blade should be re-tracked to assure proper balance and to eliminate vibration.
CAUTION: ALWAYS UNPLUG THE FAN BEFORE RE-TRACKING. NEVER OPERATE THE FAN WITHOUT ALL GUARDS PROPERLY ASSEMBLED.

To re-track the blade, use a tape measure, or similar device, to measure the distance between the back guard and the leading tip of each fan blade. Insert the tape measure from the back of the fan through the guard and rest it against a guard rib. Measurements should be taken by leaving the tape measure at the same location while rotating the fan blades to measure their distances, one at a time.

If the distances vary between blades, use a screwdriver to remove the front guard from the rear guard by unhooking the hooks from the rear guard. The distances should then be equaled by carefully bending the blade angles AT THE BLADE HUB near the motor shaft. DO NOT ATTEMPT TO BEND BLADE TIPS, since this will contribute to vibration problems you may have.

After re-tracking the blade, assemble front guard and check for balance of blade by operating the fan.

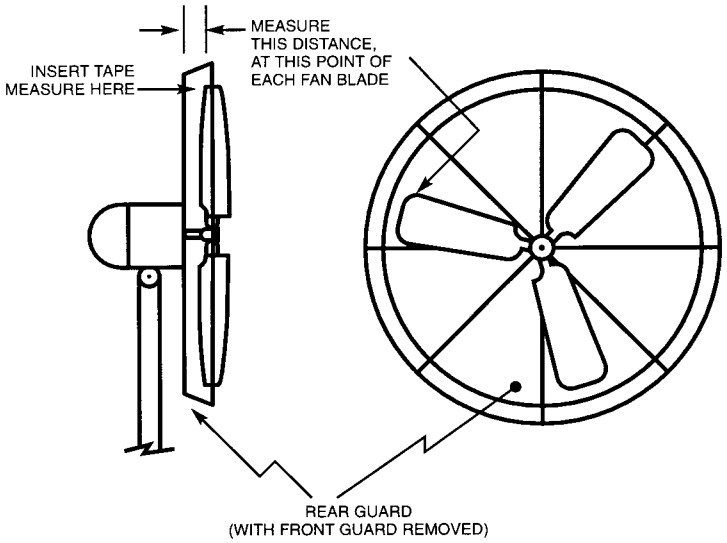

HOW TO OBTAIN WARRANTY SERVICE AND WARRANTY PARTS PLUS GENERAL INFORMATION

1. Warranty Service or Parts **1-800-642-4328**
2. Purchase Replacement Parts **1-800-654-3545**
3. General Product Information **www.marleymep.com**

Note: When obtaining service always have the following:
1. Model number of the product
2. Date of manufacture
3. Part number or description

Part No. 5200-2572-004
ECR 37557
11/07

Marley Engineered Products
470 Beauty Spot Rd. East
Bennettsville, SC 29512 USA